City of Duluth
Planning Division

411 West First Street • Room 208 • Duluth, Minnesota 55802-1197
218-730-5580 • Fax: 218-730-5904 • www.duluthmn.gov

An Equal Opportunity Employer

ACTION OF THE CITY OF DULUTH PLANNING COMMISSION

Date: May 2, 2014

Applicant:
Robert Czarnik
LCC Law
(on behalf of Sprint)
10700 West Higgins Suite 240
Rosemont IL 60018

Location: 1814 North 51st Avenue East
MS03NP157

Planning Commission File Number: PL 13-091

Proposal Requested: Add three antennas and equipment cabinets to current telecommunications site.

Per UDC 50-24.E.5.c, the land use supervisor may administratively approve an application to colocate on an existing tower or other structure or a modification at an existing site, as long as there is no proposed increase in the height of the tower or structure or attachments to the tower or structure.

Findings of Fact:

1. This application is for a modification to an existing telecommunications facility. The City adopted an ordinance in mid 2010 revising the regulation of telecommunication towers, but when the UDC was amended in 2011, one of the changes involved modification of telecommunication facilities. The change essentially streamlined replacement of antennas; applicants could replace existing antennas with new, more modern, antennas of a similar size, needing only to apply for a building permit. However, adding more antennas or cabinet equipment would still require a Special Use Permit.

2. The applicant wants to add 3 additional antennas, a microwave dish, equipment cabinets, and related accessory equipment to the site. There will be limited visual impact on adjacent properties, and there will be no change to the height of the existing facility.

3. The UDC encourages, wherever possible, the development of existing, legal, cellular telecommunications sties as well as the sharing and co-location of wireless telecommunications facilities among service providers.

4. No comments were received from other city departments, other utilities, or governmental agencies.

5. The City's telecommunications consultant provided significant guidance on reviewing this application. The consult has submitted suggestions for conditions of the projects approval.

6. Per UDC 50-37.1.N, an approved Special Use Permit will expire if the project or activity authorized by the permit is not begun within 1 year.

Conclusions:

A. The request is in harmony with the purposes and intent of the UDC.
B. The request is consistent with the comprehensive plan.
C. The request will allow reasonable use of the land.
D. The request does not impact the health, safety, or welfare of the general public.

Decision:

Resolved: that the application PL 13-091 for a special use permit is approved by the Land Use Supervisor with the following conditions:

1. That the project be maintained according to the documents titled "1814 North 51st Ave E" date 7/24/13.

2. That the applicant secure all necessary permits required by Federal, State, County or City laws and regulations.

3. That the applicant comply with items identified in "CMS Application Review" for 1814 North 51st Ave E Rice Lake Road dated 4/25/14, including submission of items granted temporary relief.

BY ORDER OF THE LAND USE SUPERVISOR

Charles Froseth

Attachments: schematics
Also sent via email: Robert Czarnik <RCzarnik@lcclaw.net>

Please note:
Special Use Permits approved by the Planning Commission shall lapse if the project or activity authorized by the review is not begun within 1 year of the permit date. The building official may extend this period one time for a period of up to 1 year if the property owner presents a written request showing the reasons for the delay was outside the owner's control (UDC Sec. 50-37.1.N).

NOTICE OF RIGHT TO APPEAL

Any person aggrieved by, or any department of the city affected by, any decision of the Commission may appeal the decision of the Commission to the Duluth City Council pursuant to Section 50-37.1O(4) of the Duluth Legislative Code. The appeal must be filed with the city clerk within 10 days of the decision. The appeal should be addressed to the council and specify the grounds for the appeal. The fee for an appeal is $350.00. The appeal fee must be tendered when the appeal is filed.

CMS Application Recommendation 4.25.14
Duluth MN Sprint 1814 N 51st Ave E

Prepared by: Bob Naumann – CMS

We have completed our review of the Application material received on February 14th, March 24th, 2014 and May 19th, 2014.

In our opinion this application is complete and ready for administrative approval subject to the conditions outlined below for the Requested Relief items for this application.

Other Standards and Requirements:

Section k) An inspection report is required for guy towers every 3 years and self support / monopoles every 5 years. **The applicant has requested timing relief for the completion of this inspection. CMS recommends approval of this relief on the condition the inspection is completed prior to the construction of these modifications and all deficiencies have been corrected with documentation of these corrections provided to the City and CMS for review and approval.**

Section q) Applicant shall clearly respond to this section on security requirements. **– The applicant has committed to bringing the site into compliance with the construction of these proposed modifications. CMS recommends approval with this condition of compliance.**

Section r) Applicant shall clearly respond to this section on signage requirements. **The applicant has committed to bringing the site into compliance with the construction of these proposed modifications. CMS recommends approval with this condition of compliance.**

Section t) Applicant shall clearly respond to this section on removal bond requirements. **– The applicant has requested timing relief for the submittal of this bond. CMS recommends approval of this relief on the condition the bond provided to the City and CMS for review and approval prior to construction.**

3.8 (3.12) Checklist: Applicants statement of compliance with the ordinance will include compliance with this checklist. See attached checklist.

RF Emission checklist. The applicant has requested temporary relief from this requirement. Sprint will complete the RF Emissions Checklist once the antennas are installed. **Applicant has requested timing relief to complete this testing after construction but prior to the final inspection / C.O.C. CMS recommends approval of this timing relief request.**

ANSI inspection report. An inspection report is required for guy towers every 3 years and self support / monopoles every 5 years. **- The applicant has requested timing relief for the completion of this inspection. CMS recommends approval of this relief on the condition the inspection is completed prior to the construction of these modifications and all deficiencies have been corrected with documentation of these corrections provided to the City and CMS for review and approval.**

Know what's below.
Call before you dig.

Sprint®

TM

THIS IS AN EXISTING SPRINT WIRELESS TELECOMMUNICATION FACILITY NETWORK VISION EQUIPMENT UPGRADE

NETWORK VISION MMBS LAUNCH

DULUTH LESTER PARK

MS03NP157

1814 N 51ST AVE E
DULUTH, MN 55804 SANT
LOUIS COUNTY

LATITUDE: 46.8408333° / 46° 50' 26.9988" (NAD 83)
LONGITUDE: -92.0227778° / -92° 1' 0008" (NAD 83)

70' FLAG POLE

ALL WORK AND MATERIALS SHALL BE PERFORMED AND INSTALLED IN ACCORDANCE WITH THE CURRENT EDITIONS OF THE FOLLOWING CODES AS ADOPTED BY THE LOCAL GOVERNING AUTHORITIES. NOTHING IN THESE PLANS IS TO BE CONSTRUCTED TO PERMIT WORK NOT CONFORMING TO THESE CODES.

BUILDING/DWELLING CODE	2007 INTERNATIONAL BUILDING CODE WITH STATE AMENDMENTS, CHAPTER 1305 (IBC 2006)
STRUCTURAL CODE	2007 INTERNATIONAL BUILDING CODE WITH STATE AMENDMENTS, CHAPTER 1305 (IBC 2006)
PLUMBING CODE	2009 MINNESOTA PLUMBING CODE CHAPTER 4715
MECHANICAL CODE	2009 MINNESOTA MECHANICAL CODE (IMC 2006)
ELECTRICAL CODE	2011 NATIONAL ELECTRICAL CODE
FIRE/LIFE SAFETY CODE	2007 INTERNATIONAL FIRE CODE WITH STATE ADMENDMENTS, NEW CHAPTER 7511
ACCESSIBILITY CODE	1999 MINNESOTA ACCESSIBILITY CODE CHAPTER 1341
ENERGY CODE	2009 MINNESOTA COMMERCIAL ENERGY CODE CHAPTER 1323

ACCESSIBILITY REQUIREMENTS:

FACILITY IS UNMANNED AND NOT FOR HUMAN HABITATION. HANDICAPPED ACCESS REQUIREMENTS ARE NOT REQUIRED IN ACCORDANCE WITH THE 2009 IBC BUILDING CODE.

CODE BLOCK

SPRINT PROPOSES TO MODIFY AN EXISTING UNMANNED TELECOMMUNICATIONS FACILITY

- REMOVE (3) EQUIPMENT CABINETS
- INSTALL (1) NEW MMBS CABINET
- INSTALL (1) NEW BBU CABINET
- INSTALL (3) NEW RRU'S

PROJECT DESCRIPTION

APPROVAL	SIGNATURE	DATE
SITE ACQUISITION MANAGER		
CONSTRUCTION MANAGER		
A&E MANAGER		
PLANNING CONSULTANT		
RF MANAGER		
RF ENGINEER		
PROPERTY OWNER		
SPRINT REPRESENTATIVE		
AAV MANAGER		

SIGNATURE BLOCK

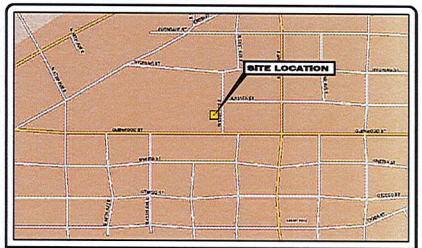

AREA MAP

VICINITY MAP

FROM MINNEAPOLIS, MN:

1. HEAD NORTHEAST ON HENNEPIN AVE TOWARD 1ST ST S
2. TURN RIGHT ONTO UNIVERSITY AVE SE
3. TURN LEFT TO MERGE ONTO I-35W N
4. CONTINUE ONTO I-35 N
5. SLIGHT RIGHT ONTO LONDON RD (SIGNS FOR MN-61/NORTH SHORE)
6. TURN LEFT ONTO NORTH 45TH AVE E
7. TURN RIGHT ONTO GLENWOOD ST
8. TURN LEFT
9. SLIGHT RIGHT

DESTINATION WILL BE ON THE LEFT

DRIVING DIRECTIONS

SHEET	DESCRIPTION
T-1	TITLE SHEET
N-1	GENERAL NOTES
N-2	GENERAL NOTES
A-1	OVERALL SITE PLAN
A-2	COMPOUND PLAN
A-3	EQUIPMENT PLANS
A-4	EQUIPMENT DETAILS
A-5	EQUIPMENT DETAILS (OUTDOOR SPECIFICATIONS)
A-6	EQUIPMENT DETAILS
A-7	COAX COLOR CODING
E-1	ONE-LINE DIAGRAM & POWER PANEL SCHEDULE
E-2	ELECTRICAL DETAILS
E-3	GROUNDING & ROUTING PLANS
GR-1	GROUNDING DETAILS
GR-2	GROUNDING DETAILS

SHEET INDEX

APPLICANT:
OPTIMA ON BEHALF OF SPRINT
710 BELDEN AVE, SUITE B
ADDISON, IL 60101
CONTACT: TBD
PHONE #: TBD

TOWER OWNER:
TOWER CO ASSETS, LLC
5000 VALLEYSTONE DR
CARY, NC 27519

SITE ID# MN2022

ZONING CLASSIFICATION:	TBD
CONSTRUCTION TYPE:	- MODIFICATION
OCCUPANCY:	- UNMANNED
JURISDICTION:	DULUTH
CURRENT USE:	UNMANNED WIRELESS TELECOMMUNICATIONS FACILITY
NEW USE:	UNMANNED WIRELESS TELECOMMUNICATIONS FACILITY

TAX MAP NUMBER (S)
TBD

LEASE AREA:
TBD

PROJECT SUMMARY

ENGINEER:
TELECAD WIRELESS SITE DESIGN
1961 NORTHPOINT BOULEVARD, SUITE 130
HIXSON, TN 37343
CONTACT: DENNIS SPRINKLE - PROJECT MANAGER
PHONE #: 423-843-9500, EXT. 103
EMAIL: DENNIS.SPRINKLE@TELECADENG.COM

SITE ACQ. PROJECT MANAGER:
WILLIN CONSULTANTS, INC.
889 COMMERCE DR, SUITE B
CONYERS, GA 30094
CONTACT: DEBORAH A. WILSON
PHONE #: (800) 517-7720
EMAIL: DEBORAHWILSON@WILLINCONSULTANTS.COM

CONSTRUCTION MANAGER:
TBD

BUILDING DEPARTMENT:
TBD

ELECTRICAL COMPANY:
TBD

TELCO COMPANY:
TBD

AAV MANAGER:
TBD

RF ENGINEER:
TBD

PROJECT TEAM

Sprint®

SAMSUNG

REV.	DATE	REVISION DESCRIPTION	DRAWN BY	CHKD. BY
0	07-24-13	ISSUED FOR CONSTRUCTION	JAE	SEH
A	07-19-13	ISSUED FOR REVIEW	JAE	SEH

TeleCAD Wireless

1961 NORTHPOINT BLVD., SUITE 130
HIXSON, TN 37343
PH: 423-843-9500 FAX: 423-843-9509

I HEREBY CERTIFY THAT THIS PLAN, SPECIFICATION, OR REPORT WAS PREPARED BY ME OR UNDER MY DIRECT SUPERVISION AND THAT I AM A DULY LICENSED ARCHITECT UNDER THE LAWS OF THE STATE OF MINNESOTA

SIGNATURE

PRINT NAME: STEPHEN E HUNT

DATE: 7/24/13 LICENSE # 47489

PROJECT INFORMATION:
NETWORK VISION MMBS LAUNCH
DULUTH LESTER PARK
MS03NP157
1814 N 51ST AVE E
DULUTH, MN 55804
SANT LOUIS COUNTY

DRAWN BY:	CHECKED BY:	DATE:
JAE	SEH	07-19-13

SHEET TITLE: TITLE SHEET

SHEET NUMBER: T-1

REV.: 0

GENERAL CONSTRUCTION NOTES

1. ALL WORK SHALL CONFORM TO THE REQUIREMENTS OF THE LOCAL BUILDING CODE, THE LATEST EDITION AND ALL OTHER APPLICABLE CODES AND ORDINANCES.
2. CONTRACTOR SHALL CONSTRUCT SITE IN ACCORDANCE WITH THESE DRAWINGS AND SPRINT INTEGRATED CONSTRUCTION STANDARDS FOR WIRELESS SITES (LATEST REVISION). THE SPECIFICATION IS THE RULING DOCUMENT AND ANY DISCREPANCIES BETWEEN THE SPECIFICATION AND THESE DRAWINGS SHOULD BE BROUGHT TO THE ATTENTION OF THE ENGINEER PRIOR TO PROCEEDING WITH CONSTRUCTION.
3. CONTRACTOR SHALL VISIT THE JOB SITE AND SHALL FAMILIARIZE HIMSELF WITH ALL CONDITIONS AFFECTING THE NEW WORK AND SHALL MAKE PROVISIONS AS TO THE COST THEREOF. FIELD CONDITIONS AND DIMENSIONS AND CONFIRMING THAT THE WORK MAY BE ACCOMPLISHED AS SHOWN PRIOR TO PROCEEDING WITH CONSTRUCTION. ANY DISCREPANCIES SHALL BE BROUGHT TO THE ATTENTION OF THE ENGINEER PRIOR TO THE COMMENCEMENT OF WORK. NO COMPENSATION WILL BE AWARDED BASED ON CLAIM OF LACK OF KNOWLEDGE OF FIELD CONDITIONS.
4. PLANS ARE NOT TO BE SCALED. THESE PLANS ARE INTENDED TO BE A DIAGRAMMATIC OUTLINE ONLY UNLESS OTHERWISE NOTED. THE WORK SHALL INCLUDE FURNISHING MATERIALS, EQUIPMENT AND APPURTENANCES, AND LABOR NECESSARY TO EFFECT ALL INSTALLATIONS AS INDICATED ON THE DRAWINGS.
5. DIMENSIONS SHOWN ARE TO FINISH SURFACES UNLESS OTHERWISE NOTED. SPACING BETWEEN EQUIPMENT IS REQUIRED CLEARANCE. THEREFORE, IT IS CRITICAL TO FIELD VERIFY DIMENSIONS, SHOULD THERE BE ANY QUESTIONS REGARDING THE CONTRACT DOCUMENTS, EXISTING CONDITIONS AND/OR DESIGN INTENT, THE CONTRACTOR SHALL BE RESPONSIBLE FOR OBTAINING THE WORK.
6. DETAILS ARE INTENDED TO SHOW DESIGN INTENT. MODIFICATIONS MAY BE REQUIRED TO SUIT JOB DIMENSIONS OR CONDITIONS, AND SUCH MODIFICATIONS SHALL BE INCLUDED AS PART OF THE WORK.
7. CONTRACTOR SHALL RECEIVE CLARIFICATION IN WRITING, AND SHALL RECEIVE IN WRITING AUTHORIZATION TO PROCEED BEFORE STARTING WORK ON ANY ITEMS NOT CLEARLY DEFINED OR IDENTIFIED BY THE CONTRACT DOCUMENTS.
8. CONTRACTOR SHALL SUPERVISE AND DIRECT THE WORK USING THE BEST CONSTRUCTION SKILLS AND ATTENTION. CONTRACTOR SHALL BE SOLELY RESPONSIBLE FOR CONSTRUCTION MEANS, METHODS, TECHNIQUES, SEQUENCES AND PROCEDURES AND FOR COORDINATING ALL PORTIONS OF THE WORK UNDER CONTRACT, UNLESS OTHERWISE NOTED.
9. CONTRACTOR SHALL BE RESPONSIBLE FOR THE SAFETY OF THE WORK AREA, ADJACENT AREAS AND BUILDING OCCUPANTS THAT ARE LIKELY TO BE AFFECTED BY THE WORK UNDER THIS CONTRACT. WORK SHALL CONFORM TO ALL OSHA REQUIREMENTS.
10. CONTRACTOR SHALL COORDINATE HIS WORK WITH THE SUPERINTENDENT OF BUILDINGS & GROUNDS AND SCHEDULE HIS ACTIVITIES AND WORKING HOURS IN ACCORDANCE WITH THE REQUIREMENTS.
11. CONTRACTOR SHALL BE RESPONSIBLE FOR COORDINATING HIS WORK WITH THE WORK OF OTHERS AS IT MAY RELATE TO RADIO EQUIPMENT, ANTENNAS AND ANY OTHER PORTIONS OF THE WORK.
12. INSTALL ALL EQUIPMENT AND MATERIALS IN ACCORDANCE WITH MANUFACTURERS RECOMMENDATIONS UNLESS SPECIFICALLY OTHERWISE INDICATED OR WHERE LOCAL CODES OR REGULATIONS TAKE PRECEDENCE.
13. MAKE NECESSARY PROVISIONS TO PROTECT EXISTING SURFACES, EQUIPMENT, IMPROVEMENTS, PIPING ETC. AND IMMEDIATELY REPAIR ANY DAMAGE THAT OCCURS DURING CONSTRUCTION.
14. IN DRILLING HOLES INTO CONCRETE WHETHER FOR FASTENING OR ANCHORING PURPOSES, OR PENETRATIONS THROUGH THE FLOOR FOR CONDUIT RUNS, PIPE RUNS, ETC., MUST BE CLEARLY UNDERSTOOD THAT REINFORCING STEEL SHALL NOT BE DRILLED INTO, CUT OR DAMAGED UNDER ANY CIRCUMSTANCES (UNLESS NOTED OTHERWISE). LOCATIONS OF REINFORCING STEEL ARE NOT DEFINITELY KNOWN AND THEREFORE MUST BE SEARCHED FOR BY APPROPRIATE METHODS AND EQUIPMENT.
15. REPAIR ALL EXISTING WALL SURFACES DAMAGED DURING CONSTRUCTION SUCH THAT THEY MATCH AND BLEND IN WITH ADJACENT SURFACES.
16. SEAL PENETRATIONS THROUGH FIRE RATED AREAS WITH U.L. LISTED AND FIRE CODE APPROVED MATERIALS.
17. KEEP CONTRACT AREA CLEAN, HAZARD FREE, AND DISPOSE OF ALL DIRT, DEBRIS, AND RUBBISH. EQUIPMENT NOT SPECIFIED AS REMAINING ON THE PROPERTY OF THE OWNER SHALL BE REMOVED. LEAVE PREMISES IN CLEAN CONDITION AND FREE FROM PAINT SPOTS, DUST, OR SMUDGES OF ANY NATURE. CONTRACTOR SHALL BE RESPONSIBLE FOR MAINTAINING ALL ITEMS UNTIL COMPLETION OF CONSTRUCTION.
18. MINIMUM BEND RADIUS OF ANTENNA CABLES SHALL BE IN ACCORDANCE WITH CABLE MANUFACTURERS RECOMMENDATIONS.
19. ALL EXISTING INACTIVE SEWER, WATER, GAS, ELECTRIC AND OTHER UTILITIES, WHICH INTERFERE WITH THE EXECUTION OF THE WORK, SHALL BE REMOVED AND/OR CAPPED, PLUGGED OR OTHERWISE DISCONTINUED AT POINTS WHICH WILL NOT INTERFERE WITH THE EXECUTION OF THE WORK, SUBJECT TO THE APPROVAL OF THE ENGINEER.
20. CONTRACTOR SHALL MINIMIZE DISTURBANCE TO EXISTING SITE DURING CONSTRUCTION. EROSION CONTROL MEASURES, IF REQUIRED DURING CONSTRUCTION SHALL BE IN CONFORMANCE WITH JURISDICTIONAL OR STATE AND LOCAL GUIDELINES FOR EROSTION AND SEDIMENT CONTROL AND COORDINATED WITH LOCAL REGULATORY AUTHORITIES.
21. LIGHT SHADED LINES AND NOTES REPRESENT WORK PREVIOUSLY DONE. DARK SHADED LINES AND NOTES REPRESENT THE SCOPE OF WORK FOR THIS PROJECT. CONTRACTOR SHALL VERIFY IF EXISTING CONSTRUCTION IS COMPLETE. CONTRACTOR SHALL NOTIFY ENGINEER OF ANY EXISTING CONDITIONS THAT DEVIATE FROM THE DRAWINGS PRIPOOR TO BEGINNING CONSTRUCTION.
22. CONTRACTOR SHALL SECURE ALL NECESSARY PERMITS AND/OR WIRING CERTIFICATES REQUIRED FOR THE ELECTRICAL SERVICE UPGRADE. IN ADDITION, CONTRACTOR SHALL PROVIDE ALL NECESSARY COORDINATION AND SCHEDULING WITH THE SERVING ELECTRICAL UTILITY AND LOCAL INSPECTION AUTHORITIES.

ELECTRICAL NOTES

1. ELECTRICAL CONTRACTOR SHALL SUPPLY AND INSTALL ANY/ALL ELECTRICAL WORK INDICATED. ANY/ALL CONSTRUCTION SHALL BE IN ACCORDANCE W/DRAWINGS AND ANY/ALL APPLICABLE SPECIFICATIONS. IF ANY PROBLEMS ARE ENCOUNTERED BY COMPLYING WITH THESE REQUIREMENTS, CONTRACTOR SHALL NOTIFY 'CONSTRUCTION MANAGER' AS SOON AS POSSIBLE, AFTER THE DISCOVERY OF THE PROBLEMS, AND SHALL NOT PROCEED WITH THAT PORTION OF WORK, UNTIL THE 'CONSTRUCTION MANAGER' HAS DIRECTED THE CORRECTIVE ACTIONS TO BE TAKEN.
2. ELECTRICAL CONTRACTOR SHALL VISIT THE JOB SITE AND FAMILIARIZE HIMSELF WITH ANY/ALL CONDITIONS AFFECTING ELECTRICAL AND COMMUNICATION INSTALLATION AND MAKE PROVISIONS AS TO THE COST THEREOF. ALL EXISTING CONDITIONS OF ELECTRICAL EQUIP., LIGHT FIXTURES, ETC., THAT ARE PART OF THE FINAL SYSTEM, SHALL BE VERIFIED BY THE CONTRACTOR, PRIOR TO THE SUBMITTAL OF HIS BID. FAILURE TO COMPLY WITH THIS PARAGRAPH WILL IN NO WAY RELIEVE CONTRACTOR OF PERFORMING ALL WORK NECESSARY FOR A COMPLETE AND WORKING SYSTEM.
3. ALL WORK SHALL BE PERFORMED IN ACCORDANCE WITH THE LATEST EDITION OF THE NEC AND ALL CODES AND LOCAL ORDINANCES OF THE LOCAL POWER & TELEPHONE COMPANIES HAVING JURISDICTION AND SHALL INCLUDED BUT NOT BE LIMITED TO:
   A. UL -- UNDERWRITERS LABORATORIES
   B. NEC -- NATIONAL ELECTRICAL CODE
   C. NEMA -- NATIONAL ELECTRICAL MANUFACTURERS ASSOC.
   D. OSHA -- OCCUPATIONAL SAFETY AND HEALTH ACT
   E. IBC -- INTERNATIONAL BUILDING CODE
   F. NFPA -- NATIONAL FIRE CODES
4. DO NOT SCALE ELECTRICAL DRAWINGS, REFER TO SITE PLANS AND ELEVATIONS FOR EXACT LOCATIONS OF ALL EQUIPMENT, AND CONFIRM WITH "CONSTRUCTION MANAGER" ANY SIZES AND AND LOCATIONS WHEN NEEDED.
5. EXISTING SERVICES: CONTRACTOR SHALL NOT INTERRUPT EXISTING SERVICES WITHOUT WRITTEN PERMISSION OF THE GDIT.
6. CONTRACTOR SHALL PAY FOR ANY/ALL PERMITS, FEES, INSPECTIONS AND TESTING. CONTRACTOR IS TO OBTAIN PERMITS AND APPROVED SUBMITTALS PRIOR TO THE WORK BEGINNING OR ORDERING EQUIPMENT.
7. THE TERM "PROVIDE" USED IN CONSTRUCTION DOCUMENTS AND SPECIFICATIONS, INDICATES THAT THE CONTRACTOR SHALL FURNISH AND INSTALL.
8. CONTRACTOR SHALL CONFIRM WITH LOCAL UTILITY COMPANY ANY/ALL REQUIREMENTS SUCH AS THE: LUG SIZE RESTRICTIONS, CONDUIT ENTRY, SIZE OF TRANSFORMERS, SCHEDULED DOWNTIME FOR THE OWNERS' CONFIRMATION, ETC. ANY/ALL CONFLICTS SHALL BE BROUGHT TO THE ATTENTION OF THE CONSTRUCTION MANAGER, PRIOR TO BEGINNING ANY WORK.
9. MINIMUM WIRE SIZE SHALL BE #12 AWG, NOT INCLUDING CONTROL WIRING, UNLESS NOTED OTHERWISE. ALL CONDUCTORS SHALL BE COPPER WITH THWN INSULATION.
10. OUTLET BOXES SHALL BE PRESSED STEEL IN DRY LOCATIONS, CAST ALLOY WITH THREADED HUBS IN WET/DAMP LOCATIONS AND SPECIAL ENCLOSURES FOR OTHER CLASSIFIED AREAS.
11. IT IS NOT THE INTENT OF THESE PLANS TO SHOW EVERY MINOR DETAIL OF THE CONSTRUCTION. CONTRACTOR IS EXPECTED TO FURNISH AND INSTALL ALL ITEMS FOR A COMPLETE ELECTRICAL SYSTEM AND PROVIDE ALL REQUIREMENTS FOR THE EQUIPMENT TO BE PLACED IN PROPER WORKING ORDER.
12. ELECTRICAL SYSTEM SHALL BE AS COMPLETELY AND EFFECTIVELY GROUNDED, AS REQUIRED BY SPECIFICATION, SET FORTH BY SPRINT.
13. ALL WORK SHALL BE PERFORMED BY A LICENSED ELECTRICAL CONTRACTOR IN A FIRST CLASS, WORKMANLIKE MANNER. THE COMPLETED SYSTEM SHALL BE FULL OPERATIVE AND SUBJECT TO REGULATORY INSPECTION AND APPROVAL BY CONSTRUCTION MANAGER.
14. ALL WORK SHALL BE COORDINATED WITH OTHER TRADES TO AVOID INTERFERENCE WITH THE PROGRESS OF CONSTRUCTION.
15. CONTRACTOR SHALL GUARANTEE ANY/ALL MATERIALS AND WORK FREE FROM DEFECTS OR A PERIOD OF NOT LESS THAN TWO YEARS FROM DATE OF CUSTOMER'S ACCEPTANCE.
16. THE CORRECTION OF ANY DEFECTS SHALL BE COMPLETED WITHOUT ANY ADDITIONAL CHARGE AND SHALL INCLUDE THE REPLACEMENT OF THE REPAIR OF ANY OTHER PHASE OF THE INSTALLATION, WHICH MAY HAVE BEEN DAMAGED THEREIN WITHIN 48 HOURS.
17. ADEQUATE AND REQUIRED LIABILITY INSURANCE SHALL BE PROVIDED FOR PROTECTION AGAINST PUBLIC LOSS AND ANY/ALL PROPERTY DAMAGE FOR THE DURATION OF WORK.
18. PROVIDE AND INSTALL CONDUIT, CONDUCTORS, PULL WIRES, BOXES, COVER PLATES AND DEVICES FOR ALL OUTLETS AS INDICATED.
19. DITCHING AND BACK FILL: CONTRACTOR SHALL PROVIDE FOR ALL UNDERGROUND INSTALLED CONDUIT AND/OR CABLES INCLUDING EXCAVATION AND BACKFILLING AND COMPACTION. REFER TO NOTES AND REQUIREMENTS, EXCAVATION, AND BACKFILLING.
20. MATERIALS, PRODUCTS AND EQUIPMENT, INCLUDING ALL COMPONENTS THEREOF, SHALL BE NEW AND SHALL APPEAR ON THE LIST OF U.L. APPROVED ITEMS AND SHALL MEET OR EXCEED THE REQUIREMENTS OF THE NEC, NEMA AND IEEE.
21. CONTRACTOR SHALL SUBMIT SHOP DRAWINGS OR MANUFACTURES CATALOG INFORMATION OF ANY/ALL LIGHTING FIXTURES, SWITCHES AND ALL OTHER ELECTRICAL ITEMS FOR APPROVAL BY THE CONSTRUCTION MANAGER PRIOR TO INSTALLATION.
22. ANY CUTTING OR PATCHING DEEMED NECESSARY FOR ELECTRICAL WORK IS THE ELECTRICAL CONTRACTORS RESPONSIBILITY AND SHALL BE INCLUDED IN THE COST FOR WORK AND PERFORMED TO THE SATISFACTION OF THE "CONSTRUCTION MANAGER" UPON FINAL ACCEPTANCE.
23. THE ELECTRICAL CONTRACTOR SHALL LABEL ALL PANELS WITH ONLY TYPEWRITTEN DIRECTORIES. ALL ELECTRICAL WIRING SHALL BE THE RESPONSIBILITY OF THE ELECTRICAL CONTRACTOR.
24. DISCONNECT SWITCHES SHALL BE H.P. RATED HEAVY-DUTY, QUICK-MAKE AND QUICK-BREAK ENCLOSURES, AS REQUIRED BY EXPOSURE TYPE.
25. ALL CONNECTIONS SHALL BE MADE WITH A PROTECTIVE COATING OF AN ANTI-OXIDE COMPOUND SUCH AS "NO-OXIDE A" BY DEARBORNE CHEMICAL CO. COAT ALL WIRE SURFACES BEFORE CONNECTING. EXPOSED COPPER SURFACES, INCLUDING GROUND BARS, SHALL BE TREATED - NO SUBSTITUTIONS.
26. RACEWAYS: CONDUIT SHALL BE SCHEDULE 40 PVC MEETING OR EXCEEDING NEMA TC2 - 1990. CONTRACTOR SHALL PLUG AND CAP EACH END OF SPARE AND EMPTY CONDUITS AND PROVIDE TWO SEPARATE PULL STRINGS - 200 LBS TEST POLYETHYLENE CORD. ALL CONDUIT BENDS SHALL BE A MINIMUM OF 2 FT. RADIUS. RGS CONDUITS WHEN SPECIFIED, SHALL MEET UL-6 FOR GALVANIZED STEEL. ALL FITTINGS SHALL BE SUITABLE FOR USE WITH THREADED RIGID CONDUIT. COAT ALL THREADS WITH 'BRITE ZINC' OR 'GOLD CALV'.
27. SUPPORT OF ALL ELECTRICAL WORK SHALL BE AS REQUIRED BY NEC.
28. CONDUCTORS: CONTRACTOR SHALL USE 98% CONDUCTIVITY COPPER WITH TYPE THWN INSULATION, 600 VOLT, COLOR CODED. USE SOLID CONDUCTORS FOR WIRE UP TO AND INCLUDING NO. 8 AWG. USE STRANDED CONDUCTORS FOR WIRE ABOVE NO. 8 AWG.
29. CONNECTORS FOR POWER CONDUCTORS: CONTRACTOR SHALL USE PRESSURE TYPE INSULATED TWIST-ON CONNECTORS FOR NO. 10 AWG AND SMALLER. USE SOLDERLESS MECHANICAL TERMINAL LUGS FOR NO. 8 AWG AND LARGER.
30. SERVICE: 240/120V, SINGLE PHASE, 3 WIRE CONNECTIONS AVAILABLE FROM UTILITY COMPANY. OWNER OR OWNERS AGENT WILL APPLY FOR POWER.
31. TELEPHONE SERVICE: CONTRACTOR SHALL PROVIDE EMPTY CONDUITS WITH MULE TAPE AS INDICATED ON DRAWINGS.
32. ELECTRICAL AND TELCO RACEWAYS TO BE BURIED A MINIMUM OF 2' DEPTH.
33. CONTRACTOR SHALL PLACE TWO LENGTHS OF WARNING TAPE AT A DEPTH OF 12" BELOW GROUND AND DIRECTLY ABOVE ELECTRICAL AND TELCO SERVICE CONDUITS. CAUTIONS TAPE TO READ "CAUTION BURIED ELECTRIC" OR "BURIED TELECOM".
34. ALL BOLTS SHALL BE STAINLESS STEEL.

ANTENNA & COAX NOTES

1. VERIFY EACH COAXIAL CABLE LENGTH, DIAMETER, ROUTING, COLOR CODING AND ALL APPURTENANCES WITH GDIT.
2. THE MAXIMUM COAXIAL CABLE LENGTH AND CORRESPONDING COAXIAL CABLE DIAMETER IS SHOWN ON SHEET A-4. THIS CABLE LENGTH IS TO BE USED FOR FABRICATION OR CONSTRUCTION. ACTUAL ANTENNA CABLE LENGTH(S) MUST BE VERIFIED. COAXIAL CABLE SHALL BE PROVIDED BY GDIT.
3. ALL COAX CABLES SHALL UTILIZE GROUND KITS, GROUNDED AS FOLLOWS:
   A. NEAR ANTENNA RAD CENTER ELEVATION,
   B. MIDDLE OF TOWER (MID-HEIGH OF ANTENNA), IF CABLE RUN IS OVER 200',
   C. BOTTOM OF TOWER,
   D. AT MASTER GROUND BAR 3'-0" FROM MMBS-BBU CABINET
4. ALL TOP JUMPERS SHALL BE LENGTHS AS SHOWN AND INSTALLED BY CONTRACTOR.
5. ALL CABLES SHALL BE COLOR CODED AS SHOWN ON SHEET RF-1 AND IN ACCORDANCE WITH SPRINT SPECIFICATIONS.
6. BANDING SHALL BE IN ACCORDANCE WITH SHEET A-4, RF-1 AND AS FOLLOWS:
   A. MAIN LINE COLOR BANDS SHALL BE 2" WIDE. MAINTAIN 1" SPACING BETWEEN COLORS.
   B. FREQUENCY COLOR BANDS SHALL BE 2" WIDE WITH NO SPACE BETWEEN COLORS.
   C. JUMPER COLOR BANDS SHALL BE 1" WIDE WITH 1" SPACE.
   D. START COLOR BANDS 2" BEYOND WEATHERPROOFING.
   E. START SELECTOR COLOR NEXT TO END CONNECTORS.
7. FINAL COAXIAL ANTENNA CABLE SIZES SHALL BE DETERMINED BY SAMSUNG RF ENGINEER. SEE ANTENNA SCHEDULE SHEET A-4. BASED ON FINAL CABLE RUN LENGTHS DETERMINED BY GD.
8. SEE CONSTRUCTION MANAGER FOR ANTENNA SUPPORT ASSEMBLY TYPE.
9. ALL COAXIAL CABLE WILL BE SECURED TO THE DESIGNED SUPPORT STRUCTURE AT DISTANCES NOT TO EXCEED 3' OR THE CABLE MANUFACTURES SPECIFICATIONS WHICHEVER IS LESS, WITH HARDWARE SPECIFIED IN THE COAXIAL CABLE ROUTING DETAILS OF THE SUPPLIED STRUCTURAL REPORT.
10. PROVIDE AT LEAST 6" OF SLACK IN THE MAIN COAXIAL CABLES AT THE ANTENNA MOUNTING ELEVATION TO PROVIDE FOR FUTURE CONNECTOR REPLACEMENT.

ANTENNA & HYBRID CABLE NOTES

1. VERIFY EACH HYBRID CABLE LENGTH, ROUTING, DIAMETER, COLOR CODING AND ALL APPURTENANCES WITH GDIT.
2. THE HYBRID CABLE AND DIAMETER LENGTH IS SHOWN ON A-4. EXCESS CABLE LENGTHS TO BE DRESSED IN A MANNER APPROVED BY GDIT. CABLES CANNOT BE CUT TO FIT.
3. HYBRID CABLE INTERNAL GROUND WIRE TO BE GROUNDED AT TOP AND BOTTOM PER SAMUSUNG'S (SPRINT) SPECIFICATIONS.
4. EXCESS TOP 15' HYBRID CABLE FIBER JUMPERS TO BE DRESSED IN A MANNER APPROVED BY GDIT, CANNOT BE COILED, MUST BE SECURED TO TOWER MOUNTS..
5. ALL MAIN CABLES SHALL BE COLOR CODED AS SHOWN ON SHEET RF-1 & IN ACCORDANCE WITH SPRINT SPECIFICATIONS.
6. BANDING SHALL BE IN ACCORDANCE WITH SHEET A-4, RF-1.
   A. MAIN LINE COLOR BANDS SHALL BE 2" WIDE. MAINTAIN 1" SPACING BETWEEN.
   B. JUMPER COLOR BANDS SHALL BE 1" WIDE WITH 1" SPACE.
   C. START COLOR BANDS 2" BEFORE MAIN CABLE END.
7. FINAL HYBRID CABLE SIZES SHALL BE DETERMINED BY SAMSUNG RF ENGINEER. SEE HYBRID CABLE SCHEDULE SHEET RF-1, BASED ON FINAL CABLE RUN LENGTHS DETERMINED BY GDIT.
8. ALL HYBRID CABLE WILL BE SECURED TO THE DESIGNED SUPPORT STRUCTURE AT DISTANCES NOT TO EXCEED 3' HORIZONTALLY OR 4' VERTICALLY OR THE CABLE MANUFACTURER'S SPECIFICATIONS WHICHEVER IS LESS, WITH HARDWARE SPECIFIED IN THE HYBRID CABLE ROUTING DETAILS OF THE SUPPLIED STRUCTURAL SUPPORT.

SITE WORK NOTES

1. DO NOT EXCAVATE OR DISTURB BEYOND THE PROPERTY LINES OR LEASE LINES, UNLESS OTHERWISE NOTED.
2. DO NOT SCALE BUILDING DIMENSIONS FROM DRAWING.
3. SIZE, LOCATION AND TYPE OF ANY UNDERGROUND UTILITIES OR IMPROVEMENTS SHALL BE ACCURATELY NOTED AND PLACED ON AS-BUILT DRAWINGS BY GENERAL CONTRACTOR AND ISSUED TO ARCHITECT/ENGINEER AT COMPLETION OF PROJECT.
4. ALL EXISTING UTILITIES, FACILITIES, CONDITIONS AND THEIR DIMENSIONS SHOWN ON PLANS HAVE BEEN PLOTTED FROM AVAILABLE RECORDS. THE ENGINEER AND OWNER ASSUME NOT RESPONSIBILITY WHATSOEVER AS TO THE SUFFICIENCY OR ACCURACY OF THE INFORMATION SHOWN ON THE PLANS OR THE MANNER OF THEIR REMOVAL OR ADJUSTMENT. CONTRACTOR SHALL BE RESPONSIBLE FOR DETERMINING EXACT LOCATION OF ALL EXISTING UTILITIES AND FACILITIES PRIOR TO START OF CONSTRUCTION. CONTRACTOR SHALL ALSO OBTAIN FROM EACH UTILITY COMPANY DETAILED INFORMATION RELATIVE TO WORKING SCHEDULES AND METHODS OF REMOVING OR ADJUSTING EXISTING UTILITIES.
5. CONTRACTOR SHALL VERIFY ALL EXISTING UTILITIES BOTH HORIZONTALLY AND VERTICALLY PRIOR TO START OF CONSTRUCTION. ANY DISCREPANCIES OR DOUBTS AS TO THE INTERPRETATION OF PLANS SHALL BE IMMEDIATELY REPORTED TO THE ARCHITECT/ENGINEER FOR RESOLUTION AND INSTRUCTION, AND NO FURTHER WORK SHALL BE PERFORMED UNTIL THE DISCREPANCY IS CHECKED AND CORRECTED BY THE ARCHITECT/ENGINEER. FAILURE TO SECURE SUCH INSTRUCTION MEANS CONTRACTOR WILL HAVE WORKED AT HIS/HER OWN RISK AND EXPENSE.
6. CONTRACTOR SHALL CALL LOCAL DIGGER HOT LINE FOR UTILITY LOCATIONS 48 HOURS PRIOR TO START OF CONSTRUCTION.
7. ALL NEW AND EXISTING UTILITY STRUCTURES ON SITE AND IN AREAS TO BE DISTURBED BY CONSTRUCTION SHALL BE ADJUSTED TO FINISH ELEVATIONS PRIOR TO FINAL INSPECTION OF WORK.
8. GRADING OF THE SITE WORK AREA IS TO BE SMOOTH AND CONTINUOUS IN SLOPE AND IS TO FEATHER INTO EXISTING GRADES AT THE GRADING LIMITS.
9. ALL TEMPORARY EXCAVATIONS FOR THE INSTALLATION OF FOUNDATIONS, UTILITIES, ETC., SHALL BE PROPERLY LAID BACK OR BRACED IN ACCORDANCE WITH CORRECT OCCUPATIONAL SAFETY AND HEALTH ADMINISTRATION (OSHA) REQUIREMENTS.
10. STRUCTURAL FILLS SUPPORTING PAVEMENTS SHALL BE COMPACTED TO 95% OF MAXIMUM STANDARD PROCTOR DRY DENSITY.
11. NEW GRADES NOT IN BUILDING AND DRIVEWAY IMPROVEMENT AREA TO BE ACHIEVED BY FILLING WITH APPROVED CLEAN FILL AND COMPACTED TO 95% OF STANDARD PROCTOR DENSITY.
12. ALL FILL SHALL BE PLACED IN UNIFORM LIFTS. THE LIFTS THICKNESS SHOULD NOT EXCEED THAT WHICH CAN BE PROPERLY COMPACTED THROUGHOUT ITS ENTIRE DEPTH WITH THE EQUIPMENT AVAILABLE.
13. ANY FILLS PLACED ON EXISTING SLOPES THAT ARE STEEPER THAN 10 HORIZONTAL TO 1 VERTICAL SHALL BE PROPERLY BENCHED INTO THE EXISTING SLOPE AS DIRECTED BY A GEOTECHNICAL ENGINEER.
14. CONTRACTOR SHALL CLEAN ENTIRE SITE DAILY AFTER CONSTRUCTION SUCH THAT NO PAPERS, THRASH, WEEDS, BRUSH OR ANY OTHER DEPOSITS WILL REMAIN. ALL MATERIALS COLLECTED DURING CLEANING OPERATIONS SHALL BE DISPOSED OF OFF-SITE BY THE GENERAL CONTRACTOR.
15. ALL TREES AND SHRUBS WHICH ARE NOT IN DIRECT CONFLICT WITH THE IMPROVEMENTS SHALL BE PROTECTED BY THE GENERAL CONTRACTOR.
16. ALL SITE WORK SHALL BE CAREFULLY COORDINATED BY GENERAL CONTRACTOR WITH LOCAL UTILITY COMPANY, TELEPHONE COMPAY, AND ANY OTHER UTILITY COMPANIES HAVING JURISDICTION OVER THIS LOCATION.

Sprint®

SAMSUNG

REV.	DATE	REVISION DESCRIPTION	DRAWN BY	CHKD. BY
0	07-24-13	ISSUED FOR CONSTRUCTION	JAE	SEH
A	07-19-13	ISSUED FOR REVIEW	JAE	SEH

TeleCAD Wireless

1961 NORTHPOINT BLVD., SUITE 130
HIXSON, TN 37343
PH: 423-843-9500 FAX: 423-843-9509

I HEREBY CERTIFY THAT THIS PLAN, SPECIFICATION, OR REPORT WAS PREPARED BY ME OR UNDER MY DIRECT SUPERVISION AND THAT I AM A DULY LICENSED ARCHITECT UNDER THE LAWS OF THE STATE OF MINNESOTA

SIGNATURE:

PRINT NAME: STEPHEN E HUNT

DATE: 7/24/13 LICENSE #: 47489

PROJECT INFORMATION:

NETWORK VISION MMBS LAUNCH

DULUTH LESTER PARK

MS03NP157

1814 N 51ST AVE E
DULUTH, MN 55804
SANT LOUIS COUNTY

DRAWN BY:	CHECKED BY:	DATE:
JAE	SEH	07-19-13

SHEET TITLE: GENERAL NOTES

SHEET NUMBER: N-1

REV.: 0

FOUNDATION, EXCAVATION AND BACKFILL NOTES

1. ALL FINAL GRADED SLOPES SHALL BE A MAXIMUM OF 3 HORIZONTAL TO 1 VERTICAL.
2. ALL EXCAVATIONS PREPARED FOR PLACEMENT OF CONCRETE SHALL BE OF UNDISTURBED SOILS, SUBSTANTIALLY HORIZONTAL AND FREE FROM ANY LOOSE, UNSUITABLE MATERIAL OR FROZEN SOILS, AND WITHOUT THE PRESENCE OF POUNDING WATER. DEWATERING FOR EXCESS GROUND WATER SHALL BE PROVIDED WHEN REQUIRED. COMPACTION OF SOILS UNDER CONCRETE PAD FOUNDATIONS SHALL NOT BE LESS THAN 95% OF THE MODIFIED PROCTOR MAXIMUM DRY DENSITY FOR THE SOIL IN ACCORDANCE WITH ASTM D1557.
3. CONCRETE FOUNDATIONS SHALL NOT BE PLACED ON ORGANIC OR UNSUITABLE MATERIAL. IF INADEQUATE BEARING CAPACITY IS REACHED AT THE DESIGNED EXCAVATION DEPTH, THE UNSATISFACTORY SOIL SHALL BE EXCAVATED TO ITS FULL DEPTH AND EITHER BE REPLACED WITH MECHANICALLY COMPACTED GRANULAR MATERIAL OR THE EXCAVATION SHALL BE FILLED WITH CONCRETE OF THE SAME TYPE SPECIFIED FOR THE FOUNDATION. CRUSHED STONE MAY BE USED TO STABILIZE THE BOTTOM OF THE EXCAVATION. ANY STONE SUB BASE MATERIAL, IF USED, SHALL NOT SUBSTITUTE FOR REQUIRED THICKNESS OF CONCRETE.
4. ALL EXCAVATIONS SHALL BE CLEAN OF UNSUITABLE MATERIAL SUCH AS VEGETATION, TRASH, DEBRIS, AND SO FORTH PRIOR TO BACK FILLING. BACK FILL SHALL CONSIST OF APPROVED MATERIALS SUCH AS EARTH, LOAM SANDY CLAY, SAND AND GRAVEL, OR SOFT SHALE, FREE FROM CLODS OR LARGE STONES OVER 2 1/2" MAX DIMENSIONS. ALL BACK FILL SHALL BE PLACED IN COMPACTED LAYERS.
5. ALL FILL MATERIALS AND FOUNDATION BACK FILL SHALL BE PLACED MAXIMUM 6" THICK LIFTS BEFORE COMPACTION. EACH LIFT SHALL BE WETTED IF REQUIRED AND COMPACTED TO NOT LESS THAN 95% OF THE MODIFIED PROCTOR MAXIMUM DRY DENSITY FOR SOIL IN ACCORDANCE WITH ASTM D1557.
6. NEWLY PLACED CONCRETE FOUNDATIONS SHALL CURE A MINIMUM OF 72 HRS PRIOR TO BACK FILLING.
7. FINISHED GRADING SHALL BE SLOPED TO PROVIDE POSITIVE DRAINAGE AND PREVENT STANDING WATER. THE FINAL (FINISH) ELEVATION OF SLAB FOUNDATIONS SHALL SLOPE AWAY IN ALL DIRECTIONS FROM THE CENTER. FINISH GRADE OF CONCRETE PADS SHALL BE A MAXIMUM OF 4 INCHES ABOVE FINAL FINISH GRADE ELEVATIONS. PROVIDE SURFACE FILL GRAVEL TO ESTABLISH SPECIFIED ELEVATIONS WHERE REQUIRED.
8. NEWLY GRADED SURFACE AREAS TO RECEIVE GRAVEL SHALL BE COVERED WITH GEOTEXTILE FABRIC TYPE: TYPAR-3401 AS MANUFACTURED BY "CONSTRUCTION MATERIALS" 1-800-289-3847 OR AN APPROVED EQUIVALENT, SHOWN ON PLANS. THE GEOTEXTILE FABRIC SHALL BE BLACK IN COLOR TO CONTROL THE RECURRENCE OF VEGETATIVE GROWTH AND EXTEND TO WITHIN 1 FOOT OUTSIDE THE SITE FENCING OR ELECTRICAL GROUNDING SYSTEM PERIMETER WHICH EVER IS GREATER. ALL FABRIC SHALL BE COVERED WITH A MINIMUM OF 4" DEEP COMPACTED STONE OR GRAVEL AS SPECIFIED. I.E. FDOT TYPE No. 57 FOR FENCED COMPOUND; FDOT TYPE No. 67 FOR ACCESS DRIVE AREA.
9. IN ALL AREAS TO RECEIVE FILL, REMOVE ALL VEGETATION, TOPSOIL, DEBRIS, WET AND UNSATISFACTORY SOIL MATERIALS, OBSTRUCTIONS, AND DELETERIOUS MATERIALS FROM GROUND SURFACE. PLOW STRIP OR BREAK UP SLOPED SURFACES STEEPER THAN 1 VERTICAL TO 4 HORIZONTAL SUCH THAT FILL MATERIAL WILL BIND WITH EXISTING/PREPARED SOIL SURFACE.
10. WHEN SUB GRADE OR PREPARED GROUND SURFACE HAS A DENSITY LESS THAN THAT REQUIRED FOR THE FILL MATERIAL, SCARIFY THE GROUND SURFACE TO DEPTH REQUIRED, PULVERIZE, MOISTURE-CONDITION AND/OR AERATE THE SOILS AND RE-COMPACT TO THE REQUIRED DENSITY PRIOR TO PLACEMENT OF FILLS.
11. IN AREAS WHICH EXISTING GRAVEL SURFACING IS REMOVED OR DISTURBED DURING CONSTRUCTION OPERATIONS, REPLACE GRAVEL SURFACING TO MATCH ADJACENT GRAVEL SURFACING AND RESTORED TO THE SAME THICKNESS AND COMPACTION AS SPECIFIED. ALL RESTORED GRAVEL SURFACING SHALL BE FREE FROM CORRUGATIONS AND WAVES.
12. EXISTING GRAVEL SURFACING MAY BE EXCAVATED SEPARATELY AND REUSED WITH THE CONDITION THAT ANY UNFAVORABLE AMOUNTS OF ORGANIC MATTER, OR OTHER DELETERIOUS MATERIALS ARE REMOVED PRIOR TO REUSE. FURNISH ANY ADDITIONAL GRAVEL RESURFACING MATERIAL AS NEEDED TO PROVIDE A FULL DEPTH COMPACTED SURFACE THROUGHOUT SITE.
13. GRAVEL SUB SURFACE SHALL BE PREPARED TO REQUIRED COMPACTION AND SUB GRADE ELEVATIONS BEFORE GRAVEL SURFACING IS PLACED AND/OR RESTORED. ANY LOOSE OR DISTURBED MATERIALS SHALL BE THOROUGHLY COMPACTED AND ANY DEPRESSIONS IN THE SUB GRADE SHALL BE FILLED AND COMPACTED WITH APPROVED SELECTED MATERIAL. GRAVEL SURFACING MATERIAL SHALL NOT BE USED FOR FILLING DEPRESSIONS IN THE SUB GRADE.
14. PROTECT EXISTING GRAVEL SURFACING AND SUB GRADE IN AREAS WHERE EQUIPMENT LOADS WILL OPERATE.
15. DAMAGE TO EXISTING STRUCTURES AND/OR UTILITIES RESULTING FROM CONTRACTORS NEGLIGENCE SHALL BE REPAIRED AND/OR REPLACED TO THE OWNERS SATISFACTION AT NO ADDITIONAL COST TO THE CONTRACT.
16. ALL SUITABLE BORROW MATERIAL FOR BACK FILL OF THE SITE SHALL BE INCLUDED IN THE BID. EXCESS TOPSOIL AND UNSUITABLE MATERIAL SHALL BE DISPOSED OF OFF SITE AT LOCATIONS APPROVED BY GOVERNING AGENCIES AT NO ADDITIONAL COST TO THE CONTRACT.

ENVIRONMENTAL NOTES

1. ALL WORK PERFORMED SHALL BE DONE IN ACCORDANCE WITH ISSUED PERMITS. THE CONTRACTOR SHALL BE RESPONSIBLE FOR PAYMENT OF FINES AND PROPER CLEAN UP FOR AREAS IN VIOLATION.
2. CONTRACTOR AND/OR DEVELOPER SHALL BE RESPONSIBLE FOR CONSTRUCTION AND MAINTENANCE OF EROSION AND SEDIMENTATION CONTROLS DURING CONSTRUCTION FOR PROTECTION OF ADJACENT PROPERTIES, ROADWAYS AND WATERWAYS AND SHALL BE MAINTAINED IN PLACE THROUGH FINAL JURISDICTIONAL INSPECTION & RELEASE OF SITE.
3. CONTRACTOR SHALL INSTALL/CONSTRUCT ALL NECESSARY SEDIMENT/SILT CONTROL FENCING AND PROTECTIVE MEASURES WITHIN THE LIMITS OF SITE DISTURBANCE PRIOR TO CONSTRUCTION.
4. NO SEDIMENT SHALL BE ALLOWED TO EXIT THE PROPERTY. THE CONTRACTOR IS REPSONIBLE FOR TAKING ADEQUATE MEASURES FOR CONTROLLING EROSION. ADDITIONAL SEDIMENT CONTROL FENCING MAY BE REQUIRED IN ANY AREAS SUBJECT TO EROSION.
5. THE CONTRACTOR IS RESPONSIBLE FOR MAINTAINING POSITIVE DRAINAGE ON THE SITE AT ALL TIMES WITH SILT AND EROSION CONTROL MEASURES MAINTAINED ON THE DOWNSTREAM SIDE OF SITE DRAINAGE. ANY DAMAGE TO ADJACENT PROPERTY AS A RESULT OF EROSION WILL BE CORRECTED AT THE CONTRACTORS EXPENSE.
6. CONTRACTOR SHALL BE RESPONSIBLE FOR DAILY INSPECTIONS AND ANY REPAIRS OF ALL SEDIMENT CONTROL MEASURES INCLUDING SEDIMENT REMOVAL AS NECESSARY.
7. CLEARING OF VEGETATION AND TREE REMOVAL SHALL BE ONLY AS PERMITTED AND BE HELD TO A MINIMUM. ONLY TREES NECESSARY FOR CONSTRUCTION OF THE FACILITIES SHALL BE REMOVED.
8. SEEDING SAND MULCHING AND/OR SODDING OF THE SITE WILL BE ACCOMPLISHED AS SOON AS POSSIBLE AFTER COMPLETION OF THE PROJECT FACILITIES AFFECTING LAND DISTURBANCE.
9. CONTRACTOR SHALL PROVIDE ALL EROSION AND SEDIMENTATION CONTROL MEASURES AS REQUIRED BY LOCAL, COUNTY AND STATE CODES AND ORDINANCES TO PROTECT EMBANKMENTS FROM SOIL LOSS AND TO PREVENT ACCUMULATION OF SOIL AND SILT IN STREAMS AND DRAINAGE PATHS LEAVING THE CONSTRUCTION AREA. THIS MAY INCLUDE SUCH MEASURES AS SILT FENCES, STRAW BALE SEDIMENT BARRIERS, AND CHECK DAMS.
10. RIP RAP OF SIZES INDICATED SHALL CONSIST OF CLEAN, HARD, SOUND, DURABLE, UNIFORM IN QUALITY STONE FREE OF ANY DETRIMENTAL QUANTITY OF SOFT, FRIABLE, THIN, ELONGATED OR LAMINATED PIECES, DISINTEGRATED MATERIAL, ORGANIC MATTER, OIL, ALKALI, OR OTHER DELETERIOUS SUBSTANCES.

STRUCTURAL STEEL NOTES

1. ALL STEEL WORK SHALL BE IN ACCORDANCE WITH THE LATEST EDITION OF THE AISC MANUAL OF STEEL CONSTRUCTION. STEEL SECTIONS SHALL BE IN ACCORDANCE WITH ASTM AS INDICATED BELOW:
   W-SHAPES: ASTM A992, 50 KSI
   ANGLES, BARS CHANNELS: ASTM A36, 36 KSI
   HSS SECTIONS: ASTM 500, 46 KSI
   PIPE SECTIONS: ASTM A53-E, 35 KSI
2. ALL EXTERIOR EXPOSED STEEL AND HARDWARE SHALL BE HOT DIPPED GALVANIZED.
3. ALL WELDING SHALL BE PERFORMED USING E70XX ELECTRODES AND WELDING SHALL CONFORM TO AISC. WHERE FILLET WELD SIZES ARE NOT SHOWN, PROVIDE THE MINIMUM SIZE PER TABLE J2.4 IN THE AISC "MANUAL OF STEEL CONSTRUCTION". PAINTED SURFACES SHALL BE TOUCHED UP.
4. NON-STURCUTRAL CONNECTIONS FOR STEEL GRATING MAY USE 5/8"ø ASTM A 307 BOLTS UNLESS NOTED OTHERWISE..
5. FIELD MODIFICATIONS ARE TO BE COATED WITH ZINC ENRICHED PAINT.

CONCRETE MASONRY NOTES

1. CONCRETE MASONRY UNITS SHALL BE MEDIUM WEIGHT UNITS CONFORMING TO ASTM C90, GRADE N-1, (F'M=1,500 PS). MEDIUM WEIGHT (115 PCF).
2. MORTAR SHALL BE TYPE "S" (MINIMUM 1,800 PSI AT 28 DAYS).
3. GROUT SHALL HAVE A MINIMUM COMPRESSIVE STRNGTH OF 3,000 PSI AT 28 DAYS.
4. ALL CELLS CONTAINING REINFORCING STEEL OR EMBEDDED ITEMS AND ALL CELLS IN RETAINING WALLS AND WALLS BELOW GRADE SHALL BE SOLID GROUTED.
5. ALL HORIZONTAL REINFORCEMENT SHALL BE PLACED IN BOND BEAM OR LINTEL BEAM UNITS.
6. WHEN GROUTING IS STOPPED FOR ONE HOUR OR LONGER, HORIZONTAL CONSTRUCTION JOINTS SHALL BE FORMED BY STOPPING THE GROUT POUR 1-1/2" BELOW TOP OF THE UPPERMOST UNIT.
7. ALL BOND BEAM BLOCK SHALL BE "DEEP CUT" UNITS.
8. PROVIDE INSPECTION AND CLEAN-OUT HOLES AT BASE OF VERTICAL CELLS HAVING GROUT LIFTS IN EXCESS OF 4'-0" OF HEIGHT.
9. ALL GROUT SHALL BE CONSOLIDATED WITH A MECHANICAL VIBRATOR.
10. CEMENT SHALL BE AS SPECIFIED FOR CONCRETE.
11. REINFORCING BARS – SEE NOTES UNDER "STRUCTURAL CONCRETE NOTES" FOR REQUIREMENTS.
12. PROVIDE ONE BAR DIAMETER (A MINIMUM OF 1/2") GROUT BETWEEN MAIN REINFORCING AND MASONRY UNITS.
13. LOW LIFT CONSTRUCTION, MAXIMUM GROUT POUR HEIGHT IS 4 FEET.
14. HIGH LIFT GROUTED CONSTRUCTION MAY BE USED IN CONFORMANCE WITH PROJECT SPECIFICATIONS AND SECTION 2104.6.1 OF U.B.C.
15. ALL CELLS IN CONCRETE BLOCKS SHALL BE FILLED SOLID WITH GROUT, EXCEPT AS NOTEED IN THE DRAWINGS OR SPECIFICATIONS.
16. CELLS SHALL BE IN VERTICAL ALIGNMENT, DOWELS IN FOOTINGS SHALL BE SET TO ALIGN WITH CORES CONTAINING REINFORCING STEEL.
17. REFER TO ARCHITECTURAL DRAWINGS FOR SURFACE AND HEIGHT OF UNITS, LAYING PATTER AND JOINT TYPE.
18. SAND SHALL BE CLEAN, SHARP AND WELL GRADED, FREE FROM INJURIOUS AMOUNTS OF DUST, LUMPS, SHALE, ALKAU OR ORGANIC MATERIAL.
19. BRICK SHALL CONFORM TO ASTM C-62 AND SHALL BE GRADE MW OR BETTER.

STRUCTURAL CONCRETE NOTES

1. ALL CONCRETE WORK SHALL BE IN ACCORDANCE WITH THE ACI 301-05, ACI 318-05 AND THE SPECIFICATION FOR CAST-IN-PLACE CONCRETE.
2. ALL CONCRETE SHALL HAVE A MINIMUM COMPRESSIVE STRENGTH fc'=3,000 PSI AT 28 DAYS UNLESS NOTED OTHERWISE.
3. REINFORCING STEEL SHALL CONFORM TO ASTM A 615, GRADE 60, DEFORMED UNLESS NOTED OTHERWISE. WELDED WIRE FABRIC SHALL CONFORM TO ASTM A 185 WELDED STEEL WIRE FABRIC UNLESS NOTED OTHERWISE. SPLICES CLASS "B" AND ALL HOOKS SHALL BE STANDARD UNLESS NOTED OTHERWISE.
4. THE FOLLOWING MINIMUM CONCRETE COVER SHALL BE PROVIDED FOR REINFORCING STEEL UNLESS SHOWN OTHERWISE ON DRAWINGS:

   CONCRETE CAST AGAINST EARTH.....3 IN.

   CONCRETE EXPOSED TO EARTH OR WEATHER:
   #6 AND LARGER.....2 IN.
   #5 AND SMALLER & WWF.....1 1/2 IN.

   CONCRETE NOT EXPOSED TO EARTH OR WEATHER OR NOT CAST AGAINST THE GROUND:
   SLAB AND WALL.....3/4 IN.
   BEAMS AND COLUMNS.....1 1/2 IN.
5. A 3/4" CHAMFER SHALL BE PROVIDED AT ALL EXPOSED EDGES OF CONCRETE U.N.O. IN ACCORDANCE WITH ACI 301 SECTION 4.2.4
6. HOLES TO RECEIVE EXPANSION/WEDGE ANCHORS SHALL BE 1/8" LARGER IN DIAMETER THAN THE ANCHOR BOLT, DOWEL OR ROD AND SHALL CONFORM TO MANUFACTURER'S RECOMMENDATION FOR EMBEDMENT DEPTH OR AS SHOWN ON THE DRAWINGS. LOCATE AND AVOID CUTTING EXISTING REBAR WHEN DRILLING HOLES IN ELEVATED CONCRETE SLABS.
7. USE AND INSTALLATION OF CONCRETE EXPANSION/WEDGE ANCHOR, SHALL BE PER ICBO & MANUFACTURER'S WRITTEN RECOMMENDED PROCEDURES.

WEATHERPROOFING NOTES

STANDARD CONSTRUCTION SPECIFICATIONS FOR WIRELESS SITES

1.0 WEATHERPROOFING CONNECTORS AND GROUND KITS:

A. ALL CONNECTORS AND GROUND KITS SHALL BE WEATHERPROOFED USING BUTYL RUBBER WEATHERPROOFING AND TAPE. THIS INSTALLATION MUST BE DONE IN ACCORDANCE WITH THE MANUFACTURER'S RECOMMENDATION OR AS SHOWN ON THE CONSTRUCTION DRAWINGS (WHICHEVER IS GREATER). IF NO DIRECTION IS PROVIDED, WEATHERPROOFING MUST BE DONE PER THE FOLLOWING INSTRUCTIONS.

1. THE COAXIAL CABLE CONNECTION OR GROUND KIT CAN BE ENCOMPASSED INTO COLD SHRINK AND COMPLETELY WRAPPED WITH 2 INCH WIDE ELECTRICAL TAPE OVERLAPPING EACH ROW BY APPROXIMATELY ½? AND EXTENDING PAST THE CONNECTION BY TWO INCHES AS DISCUSSED BELOW; OR
2. THE COAXIAL CABLE CONNECTION OR GROUND KIT CAN BE WRAPPED WITH LAYERS OF ELECTRICAL/BUTYL RUBBER/ELECTRICAL TAPE AS DISCUSSED BELOW; OR
3. THE COAXIAL CABLE CONNECTION OR GROUND KIT CAN BE WRAPPED WITH TWO LAYERS OF 1.5 INCH WIDE SELF-AMALGAMATING TAPE COVERED WITH TWO LAYERS OF ELECTRICAL TAPE AS DISCUSSED BELOW.

B. COLD SHRINK INSTALLATION PROCEDURE:

1. REQUIRED MATERIAL: COLD SHRINK TUBE, SPACERS AS NEEDED, BLACK ELECTRICAL TAPE-2 INCHES WIDE
2. REQUIRED TOOLS: KNIFE AND TAPE MEASURE

STEP 1: THOROUGHLY CLEAN AND DRY THE SURFACE OF COAXIAL CABLE AND CONNECTOR TO REMOVE ALL GREASE AND DIRT. MARK THE MAIN FEED (LARGER DIAMETER) COAXIAL CABLE AT LEAST TWO INCHES ABOVE THE CONNECTION AS THE SPECIFIED START DIMENSION FOR THE COLD SHRINK.

STEP 2: SLIDE THE COLD SHRINK TUBE OVER THE PRE-CONNECTORIZED END OF THE LARGER DIAMETER COAXIAL CABLE PRIOR TO MATING CONNECTOR INTERFACES. MAKE THE CONNECTION.

STEP 3: REMOVE WAX PAPER FROM A SPACER HALF AND PRESS ONTO COAXIAL CABLE DIRECTLY BEHIND THE CONNECTOR. REMOVE THE WAX PAPER FROM THE OTHER SPACER HALF AND ALIGN THE TWO SPACER HALVES WITH ADHESIVE PORTIONS FACING EACH OTHER. PRESS THE SPACER HALVES TOGETHER. THE SPACER WILL BE PLACED NEXT TO THE CONNECTOR ON THE SMALLER DIAMETER COAXIAL CABLE SIDE.

STEP 4: SLIDE THE COLD SHRINK TUBE OVER THE CONNECTION TO THE SPECIFIED START DIMENSION MARK. HOLD THE COLD SHRINK TUBE AND COAXIAL CABLE IN ONE HAND SO THAT THE EDGE OF COLD SHRINK TUBE IS IN LINE WITH THE MARK.

STEP 5: WITH YOUR FREE HAND, BEGIN REMOVING COLD SHRINK TUBE CORE. THE CORE WILL BE REMOVED BY UNWINDING IN A COUNTERCLOCKWISE DIRECTION WHILE LIGHTLY PULLING THE ATTACHED CORD AWAY FROM THE TUBE.

STEP 6: USE BOTH HANDS TO CONTINUE THE UNWINDING PROCESS AS THE COLD SHRINK TUBE BEGINS TO COLLAPSE INTO POSITION. CONTINUE THE UNWINDING PROCESS UNTIL THE CORE IS COMPLETELY REMOVED AND THE COLD SHRINK TUBE IS INSTALLED.

STEP 7: EXCESS COLD SHRINK TUBE EXTENDING TWO INCHES BEYOND THE SPACER HALVES CAN BE REMOVED OR LEFT IN PLACE. EXCESS COLD SHRINK TUBE CAN BE CAREFULLY CUT OFF WITH A KNIFE.

STEP 8: WRAP OVER THE COLD SHRINK TUBE WITH ONE LAYER OF BLACK ELECTRICAL TAPE 2 INCH WIDTH OVERLAPPING EACH ROW BY 1/2 INCH. THIS TOP LAYER MUST BE WRAPPED USING A SHINGLED EFFECT. THE LAYER SHALL BE WRAPPED SO THAT THE ENDS ARE IN THE UPWARD DIRECTION CREATING A SHINGLED EFFECT WITH THE TAPE SO WATER WILL BE REPELLED AND NOT ALLOWED TO COLLECT AND POOL. THIS TOP LAYER OF ELECTRICAL TAPE MUST EXTEND TWO INCHES (THE TAPE WIDTH) PAST THE COLD SHRINK TUBE ONTO THE UNDERLYING CABLE. TAPE SHALL BE WRAPPED SO THAT NO VOIDS OR AIR PACKETS ARE PRESENT. TAPE SHALL BE CUT WITH A SHARP KNIFE.

C. BUTYL RUBBER TAPE INSTALLATION PROCEDURE:

1. REQUIRED MATERIAL: BLACK ELECTRICAL TAPE-2 INCH WIDE AND BUTYL RUBBER TAPE 2 TO 3 INCHES WIDE.
2. REQUIRED TOOLS: KNIFE OR SCISSORS.

STEP 1: THOROUGHLY CLEAN AND DRY THE SURFACE OF COAXIAL CABLE AND CONNECTOR TO REMOVE ALL GREASE AND DIRT. WRAP CONNECTOR/GROUND KIT WITH TWO LAYERS OF BLACK ELECTRICAL TAPE-2 INCH WIDTH OVERLAPPING EACH ROW BY APPROXIMATELY 1/2 INCH. THESE LAYERS OF TAPE MUST BE WRAPPED TIGHT ENOUGH SO THAT NO VOIDS OR AIR PACKETS ARE PRESENT AND MUST EXTEND ONE INCH PAST THE CONNECTOR/GROUND KIT ON EACH SIDE. TWO ROWS SHALL BE APPLIED, ONE IN EACH DIRECTION, WITH THE TOP ROW SHINGLED TO PROMOTE WATER RUNOFF.

STEP 2: WRAP CONNECTOR/GROUND KIT WITH ONE LAYER OF BUTYL RUBBER TAPE (2 TO 3 INCHES WIDTH) OVER THE BLACK ELECTRICAL TAPE OVERLAPPING EACH ROW BY APPROXIMATELY 1/2 INCH. THE BUTYL RUBBER TAPE MUST EXTEND 2 TO 3 INCHES (THE TAPE WIDTH) PAST THE ELECTRICAL TAPE AND COME IN GOOD CONTACT WITH THE UNDERLYING CABLE ON CONNECTORS. WHEN WEATHERPROOFING FROM THE MAIN LINE TO THE JUMPER, BUILD UP THIS AREA WITH EXTRA BUTYL RUBBER TAPE TO INSURE A SMOOTH TRANSITION FREE OF VOIDS AND AIR PACKETS DOWN TO THE SMALLER DIAMETER CABLE.

STEP 3: WRAP CONNECTOR/GROUND KIT WITH TWO LAYERS OF BLACK ELECTRICAL TAPE 2 INCH WIDTH OVERLAPPING EACH ROW BY 1 INCH. THESE LAST TWO LAYERS MUST BE WRAPPED USING A SHINGLED EFFECT. THE TOP LAYER SHALL BE WRAPPED SO THAT THE ENDS ARE IN THE UPWARD DIRECTION CREATING A SHINGLED EFFECT WITH THE TAPE SO WATER WILL BE REPELLED AND NOT ALLOWED TO COLLECT AND POOL. THESE TOP LAYERS OF ELECTRICAL TAPE MUST EXTEND TWO INCHES (THE TAPE WIDTH) PAST THE BUTYL RUBBER TAPE ONTO THE UNDERLYING CABLE.

ALL LAYERS OF TAPE SHALL BE WRAPPED SO THAT NO VOIDS OR AIR PACKETS ARE PRESENT. THE LAST WRAP OF TAPE SHALL NOT BE PULLED OR STRETCHED. ALL TAPE SHALL BE CUT WITH A SHARP KNIFE OR SCISSORS.

D. SELF-AMALGAMATING TAPE INSTALLATION PROCEDURE:

1. REQUIRED MATERIAL: SELF-AMALGAMATING TAPE -1.5 INCHES WIDE AND BLACK ELECTRICAL TAPE – 2 INCHES WIDE.
2. REQUIRED TOOLS: KNIFE OR SCISSORS.

STEP 1: THOROUGHLY CLEAN AND DRY THE SURFACE OF COAXIAL CABLE AND CONNECTOR TO REMOVE ALL GREASE AND DIRT.

STEP 2: START WRAPPING SELF-AMALGAMATING TAPE ON THE CABLE AT LEAST 2 INCHES FROM THE CONNECTOR/GROUND KIT. MAKE SURE TAPE IS STRETCHED TIGHT DURING THIS APPLICATION.

STEP 3: WHILE STRETCHING TAPE, MAKE ONE WRAP OF THE TAPE AROUND THE CABLE, MAKING SURE THE TAPE IS WRAPPED ONTO ITSELF. THE TAPE WILL ONLY ADHERE TO ITSELF.

STEP 4: CONTINUE WRAPPING THE CABLE AND CONNECTOR/GROUND KIT USING HALF OVERLAP (0.75 INCH WIDE) LAYERS.

STEP 5: WRAP OVER AND PAST THE CONNECTOR/GROUND KIT AT LEAST 2 INCHES.

STEP 6: TO TERMINATE THE SELF-AMALGAMATING TAPE, WRAP THE TAPE AT LEAST ONE FULL ROUND OVER THE CABLE STRETCHING THE TAPE TIGHT. CUT THE TAPE USING KNIFE OR SCISSORS AND APPLY THE LOOSE END TO THE UNDERLYING SELF-AMALGAMATING TAPE USING THUMB PRESSURE.

STEP 7: TWO ROWS OF SELF-AMALGAMATING TAPE SHALL BE APPLIED IN THIS MANNER, IN ALTERNATING DIRECTIONS. THE TOP LAYER SHALL BE WRAPPED SO THAT THE ENDS ARE IN AN UPWARD DIRECTION CREATING A SHINGLED EFFECT WITH THE TAPE SO WATER WILL BE REPELLED.

STEP 8: WRAP OVER SELF-AMALGAMATING TAPE WITH TWO LAYERS OF BLACK ELECTRICAL TAPE- 2 INCH WIDTH OVERLAPPING EACH ROW BY 1 INCH. THESE TOP TWO LAYERS MUST ALSO BE WRAPPED USING A SHINGLED EFFECT. THE LAYERS SHALL BE WRAPPED SO THAT THE ENDS ARE IN THE UPWARD DIRECTION CREATING A SHINGLED EFFECT WITH THE TAPE SO WATER WILL BE REPELLED AND NOT ALLOWED TO COLLECT AND POOL. THESE TOP LAYERS OF ELECTRICAL TAPE MUST EXTEND TWO INCHES (THE TAPE WIDTH) PAST THE SELF-AMALGAMATING TAPE ONTO THE UNDERLYING CABLE. ALL LAYERS OF TAPE SHALL BE WRAPPED SO THAT NO VOIDS OR AIR PACKETS ARE PRESENT. THE LAST WRAP OF TAPE SHALL NOT BE PULLED OR STRETCHED. ALL TAPE SHALL BE CUT WITH A SHARP KNIFE OR SCISSORS.

Sprint®

SAMSUNG

REV.	DATE	REVISION DESCRIPTION	DRAWN BY	CHKD. BY
0	07-24-13	ISSUED FOR CONSTRUCTION	JAE	SEH
A	07-19-13	ISSUED FOR REVIEW	JAE	SEH

TeleCAD Wireless

1961 NORTHPOINT BLVD., SUITE 130
HIXSON, TN 37343
PH: 423-843-9500 FAX: 423-843-9509

I HEREBY CERTIFY THAT THIS PLAN, SPECIFICATION, OR REPORT WAS PREPARED BY ME OR UNDER MY DIRECT SUPERVISION AND THAT I AM A DULY LICENSED ARCHITECT UNDER THE LAWS OF THE STATE OF MINNESOTA

SIGNATURE: Stephen E. Hunt

PRINT NAME: STEPHEN E HUNT

DATE 7/24/13 LICENSE # 47489

PROJECT INFORMATION:

NETWORK VISION MMBS LAUNCH

DULUTH LESTER PARK

MS03NP157

1814 N 51ST AVE E
DULUTH, MN 55804
SANT LOUIS COUNTY

DRAWN BY:	CHECKED BY:	DATE:
JAE	SEH	07-19-13

SHEET TITLE: GENERAL NOTES

SHEET NUMBER: N-2

REV.: 0

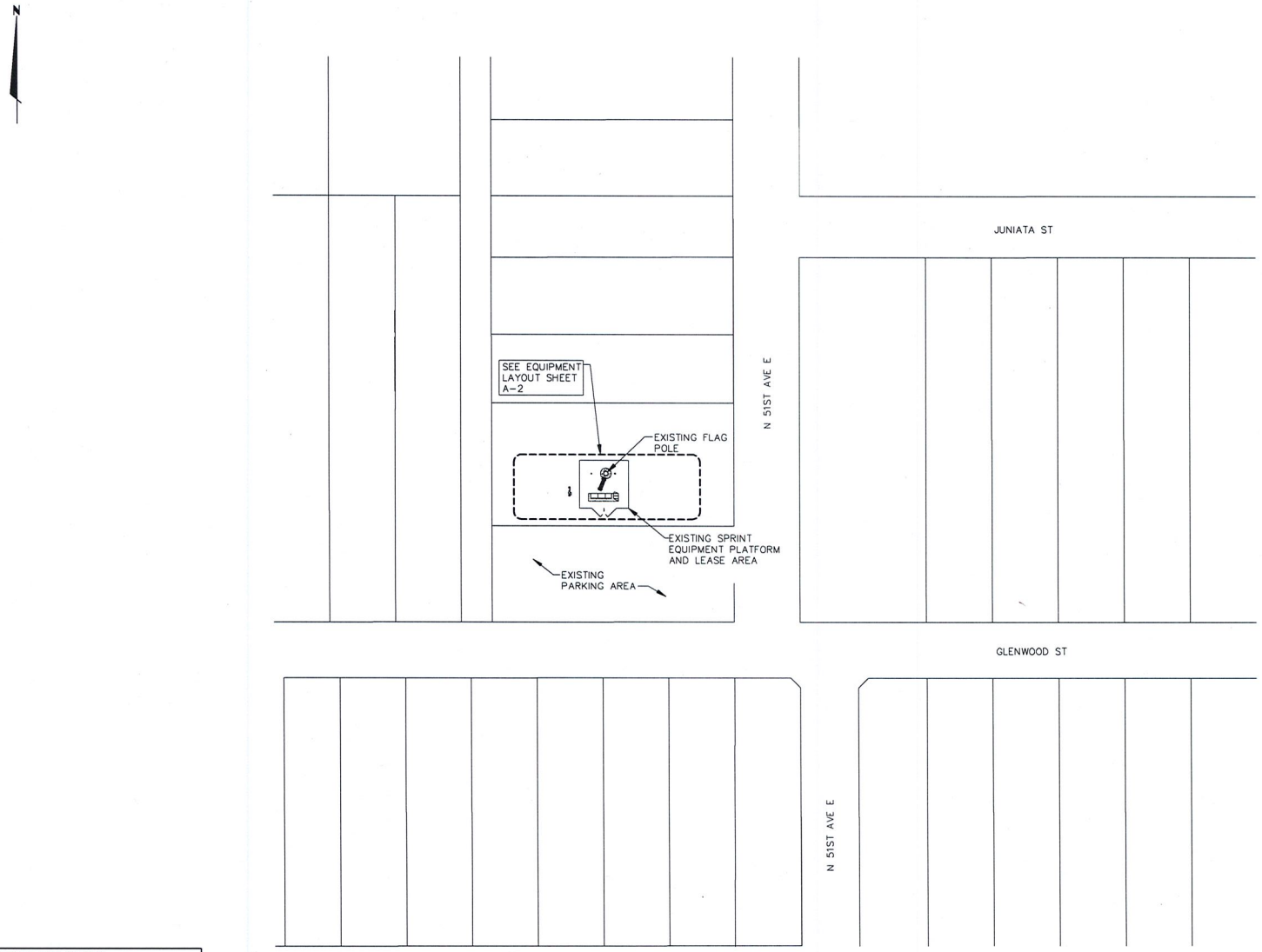

THIS IS NOT A SITE SURVEY:
ALL PROPERTY BOUNDARIES, ORIENTATION OF TRUE NORTH AND STREET HALF-WIDTHS HAVE BEEN ESTIMATED BASED OFF OF PROVIDED INFORMATION AND ONLINE GIS.

1 **OVERALL SITE PLAN**

1x17 SCALE: NOT TO SCALE | 24x36 SCALE: NOT TO SCALE

Sprint®

SAMSUNG

REV.	DATE	REVISION DESCRIPTION	DRAWN BY	CHKD. BY
0	07-24-13	ISSUED FOR CONSTRUCTION	JAE	SEH
A	07-19-13	ISSUED FOR REVIEW	JAE	SEH

TeleCAD Wireless
1961 NORTHPOINT BLVD., SUITE 130
HIXSON, TN 37343
PH: 423-843-9500 FAX: 423-843-9509

I HEREBY CERTIFY THAT THIS PLAN, SPECIFICATION, OR REPORT WAS PREPARED BY ME OR UNDER MY DIRECT SUPERVISION AND THAT I AM A DULY LICENSED ARCHITECT UNDER THE LAWS OF THE STATE OF MINNESOTA

SIGNATURE: [signature]

PRINT NAME: STEPHEN E HUNT

DATE: 7/24/13 LICENSE # 47489

PROJECT INFORMATION:

NETWORK VISION MMBS LAUNCH

DULUTH LESTER PARK

MS03NP157

1814 N 51ST AVE E
DULUTH, MN 55804
SANT LOUIS COUNTY

DRAWN BY:	CHECKED BY:	DATE:
JAE	SEH	07-19-13

SHEET TITLE: OVERALL SITE PLAN

SHEET NUMBER: A-1

REV.: 0

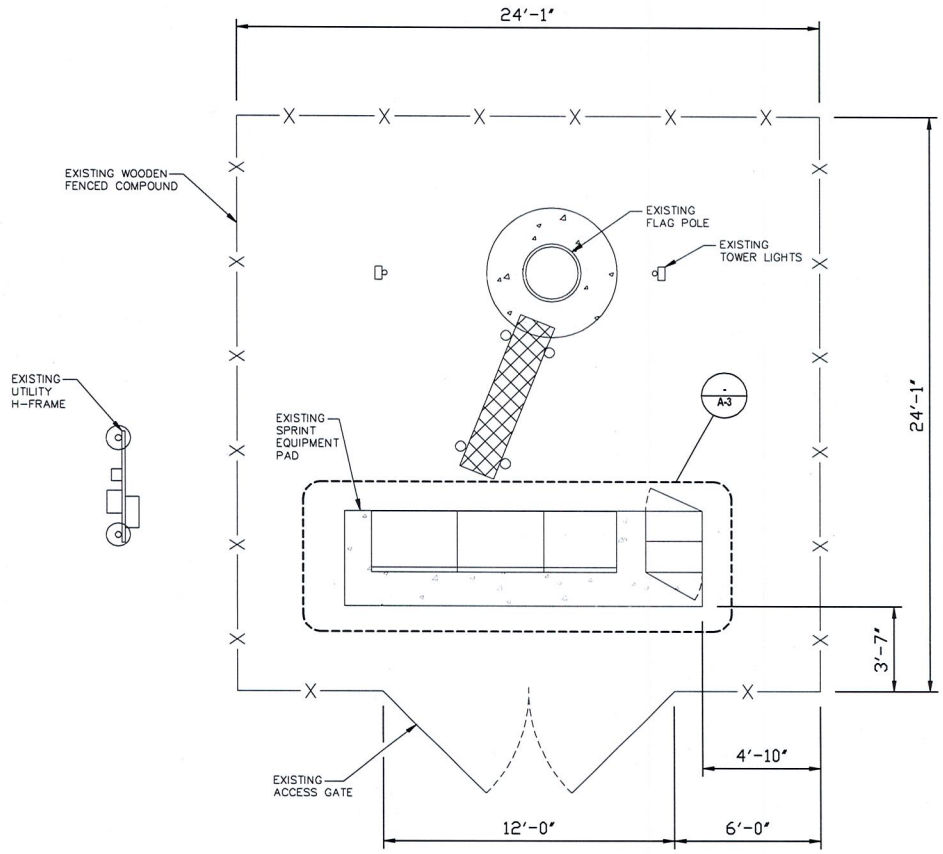

0' 5' 10' 15'

1" = 5'

1	COMPOUND PLAN - EXISTING
1x17 SCALE: 1"=5'	24x36 SCALE: 1"=2.5'

NOTE:
CONTRACTOR TO OBTAIN A STRUCTURAL ANALYSIS AND SIGNED AND SEALED CONSTRUCTION DRAWINGS PRIOR TO CONSTRUCTION.

Sprint®

SAMSUNG

REV.	DATE	REVISION DESCRIPTION	DRAWN BY	CHKD. BY
0	07-24-13	ISSUED FOR CONSTRUCTION	JAE	SEH
A	07-19-13	ISSUED FOR REVIEW	JAE	SEH

TeleCAD Wireless
1961 NORTHPOINT BLVD., SUITE 130
HIXSON, TN 37343
PH: 423-843-9500 FAX: 423-843-9509

I HEREBY CERTIFY THAT THIS PLAN, SPECIFICATION, OR REPORT WAS PREPARED BY ME OR UNDER MY DIRECT SUPERVISION AND THAT I AM A DULY LICENSED ARCHITECT UNDER THE LAWS OF THE STATE OF MINNESOTA

SIGNATURE: Stephen E. Hunt

PRINT NAME: STEPHEN E HUNT

DATE: 7/24/13 LICENSE #: 47489

PROJECT INFORMATION:

NETWORK VISION MMBS LAUNCH

DULUTH LESTER PARK

MS03NP157

1814 N 51ST AVE E
DULUTH, MN 55804
SANT LOUIS COUNTY

DRAWN BY:	CHECKED BY:	DATE:
JAE	SEH	07-19-13

SHEET TITLE: COMPOUND PLAN

SHEET NUMBER: A-2

REV.: 0

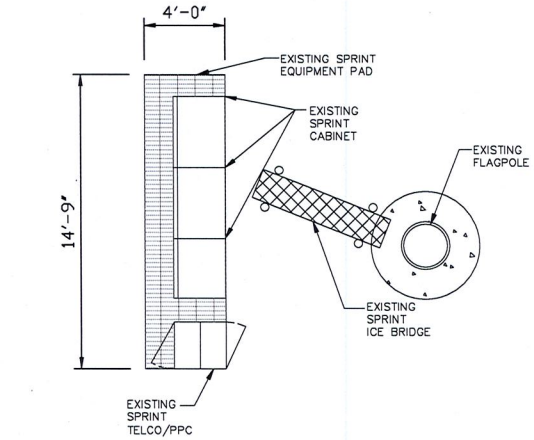

0' 3' 6' 9'

1" = 3'

1 EXISTING EQUIPMENT PLAN

1x17 SCALE: 1"=3' | 24x36 SCALE: 1"=1.5'

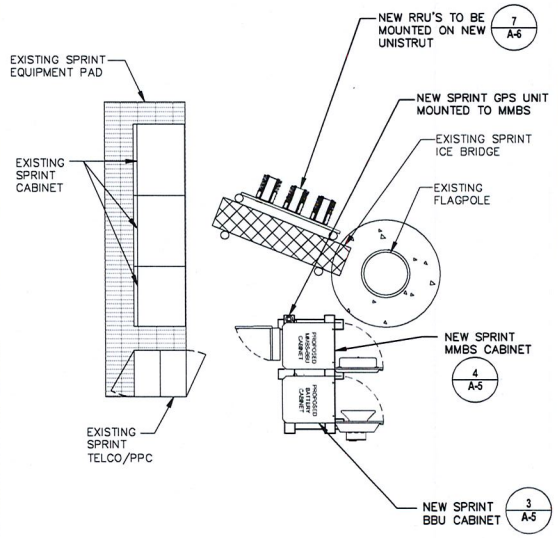

0' 3' 6' 9'

1" = 3'

2 EXISTING EQUIPMENT PLAN

11x17 SCALE: 1"=3' | 24x36 SCALE: 1"=1.5'

NOTE:
1. CONTRACTOR TO REPLACE ALL MISSING GROUND BARS AND GROUNDING CONNECTIONS AS REQUIRED.

ROUTE CABLES/COAX IN 2" FLEX TO MMBS AND RRU IF LESS THAN 6' FROM EXISTING ICE BRIDGE

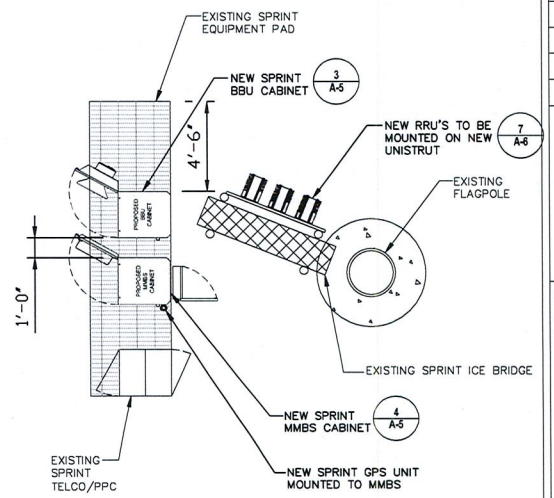

0' 3' 6' 9'

1" = 3'

3 FINAL EQUIPMENT PLAN

11x17 SCALE: 1"=3' | 24x36 SCALE: 1"=1.5'

Sprint®

SAMSUNG

REV.	DATE	REVISION DESCRIPTION	DRAWN BY	CHKD. BY
0	07-24-13	ISSUED FOR CONSTRUCTION	JAE	SEH
A	07-19-13	ISSUED FOR REVIEW	JAE	SEH

TeleCAD Wireless
1961 NORTHPOINT BLVD., SUITE 130
HIXSON, TN 37343
PH: 423-843-9500 FAX: 423-843-9509

I HEREBY CERTIFY THAT THIS PLAN, SPECIFICATION, OR REPORT WAS PREPARED BY ME OR UNDER MY DIRECT SUPERVISION AND THAT I AM A DULY LICENSED ARCHITECT UNDER THE LAWS OF THE STATE OF MINNESOTA

SIGNATURE

PRINT NAME: STEPHEN E HUNT

DATE 7/24/13 LICENSE # 47489

PROJECT INFORMATION:

NETWORK VISION MMBS LAUNCH

DULUTH LESTER PARK

MS03NP157

1814 N 51ST AVE E
DULUTH, MN 55804
SANT LOUIS COUNTY

DRAWN BY:	CHECKED BY:	DATE:
JAE	SEH	07-19-13

SHEET TITLE:

EQUIPMENT PLANS

SHEET NUMBER: A-3

REV.: 0

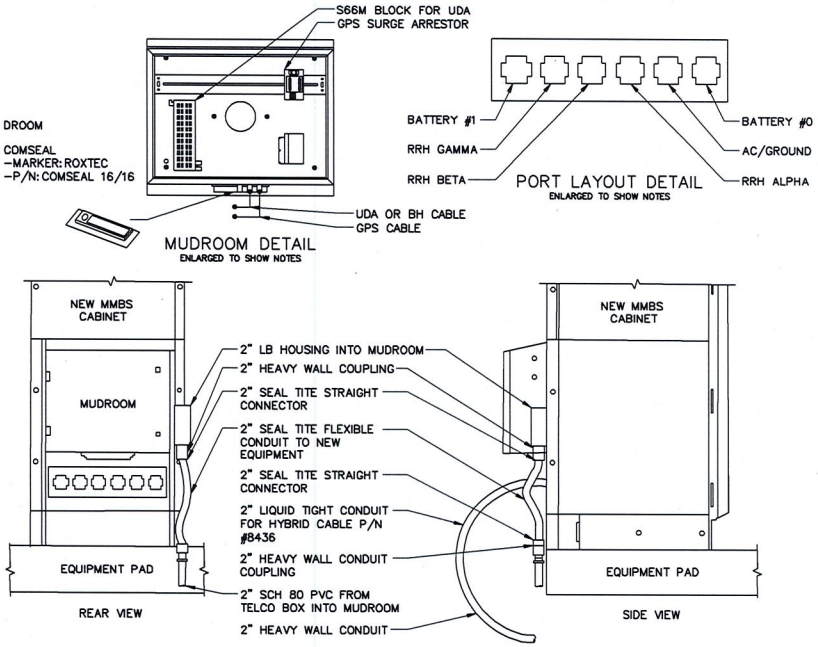

1 HYBRID AND TELCO LINE SUPPORT DETAILS

CALE: NTS

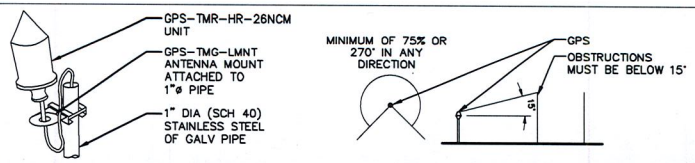

NOTES

1. THE GPS ANTENNA MOUNT IS DESIGNED TO FASTEN TO A STANDARD 1"Ø, SCH. 40, GALVANIZED STEEL OF STAINLESS STEEL PIPE. THE PIPE MUST NOT BE THREADED AT THE ANTENNA MOUNT END. THE PIPE SHALL BE CUT TO THE REQUIRED LENGTH (MIN. OF 18", 8'-0" IF MOUNTING TO NEW MMBS-BBU) USING A HAND OR ROTARY PIPE CUTTER TO ASSURE A SMOOTH AND PERPENDICULAR CUT. A HACK SAW SHALL NOT BE USED. THE CUT PIPE END SHALL BE DEBURRED.
2. IT IS CRITICAL THAT THE GPS ANTENNA IS MOUNTED SUCH THAT IT IS WITHIN 2 DEGREES OF VERTICAL AND THE BASE OF THE ANTENNA IS WITHIN 2° OF LEVEL.
3. DO NOT SWEEP TEST GPS ANTENNA
4. ATTACH GPS MOUNTING PIPE TO NEW MMBS-BBU USING (4) 8MMx15MM SS BOLTS AND (4) 1" PIPE STRAPS. GPS TO BE MOUNTED A MIN. OF 2'-0" ABOVE MMBS-BBU CABINET.

2 GPS UNIT PIPE MOUNT & REQUIREMENTS

SCALE: NTS

3 DETAIL NOT USED

SCALE: NTS

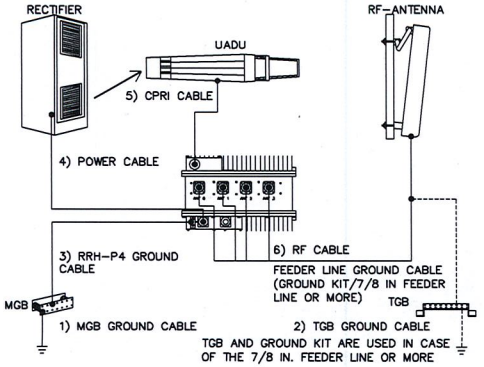

4 SAMSUNG MMBS WIRING DIAGRAM

CALE: NTS

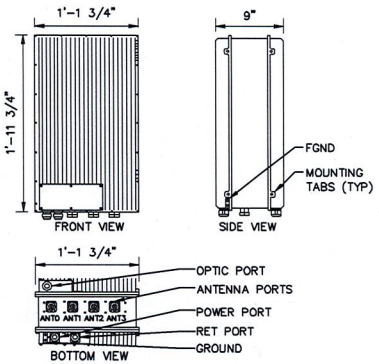

5 1900 MHz RRH-P4 MECHANICAL SPECIFICATIONS

SCALE: NTS

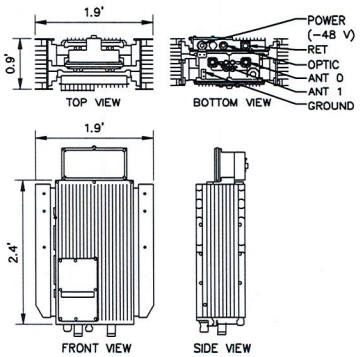

6 800 MHz RRH-C2A

SCALE: NTS

7 DETAIL NOT USED

SCALE: NTS

Sprint®

SAMSUNG

REV.	DATE	REVISION DESCRIPTION	DRAWN BY	CHKD. BY
0	07-24-13	ISSUED FOR CONSTRUCTION	JAE	SEH
A	07-19-13	ISSUED FOR REVIEW	JAE	SEH

TeleCAD Wireless
1961 NORTHPOINT BLVD., SUITE 130
HIXSON, TN 37343
PH: 423-843-9500 FAX: 423-843-9509

I HEREBY CERTIFY THAT THIS PLAN, SPECIFICATION, OR REPORT WAS PREPARED BY ME OR UNDER MY DIRECT SUPERVISION AND THAT I AM A DULY LICENSED ARCHITECT UNDER THE LAWS OF THE STATE OF MINNESOTA

SIGNATURE: Stephen E. Hunt

PRINT NAME: STEPHEN E HUNT

DATE: 7/24/13 LICENSE # 47489

PROJECT INFORMATION:

NETWORK VISION MMBS LAUNCH

DULUTH LESTER PARK

MS03NP157

1814 N 51ST AVE E
DULUTH, MN 55804
SANT LOUIS COUNTY

DRAWN BY:	CHECKED BY:	DATE:
JAE	SEH	07-19-13

SHEET TITLE: EQUIPMENT DETAILS

SHEET NUMBER: A-4

REV.: 0

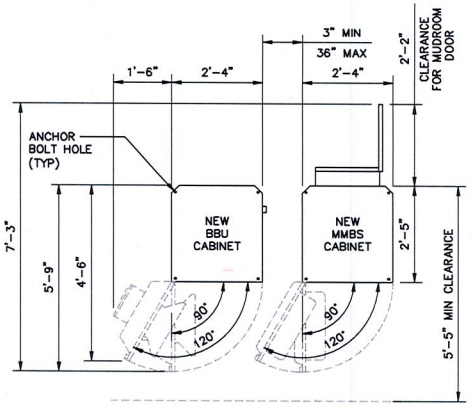

1 MMBS & BBU TYPICAL LAYOUT

CALE: NTS

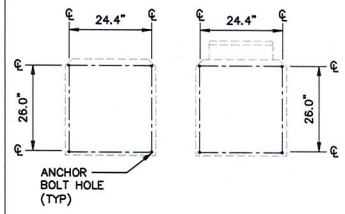

2 ANCHOR BOLT LAYOUT

SCALE: NTS

ITEM	SPECIFICATIONS
CAPACITY	MAX 4 BATTERY STRINGS
COOLING	AIR-CONDITIONER/COOLING WITH FAN FOR EMERGENCY MODE (MCLEAN T20 HVAC)
SOUND LEVEL	65BA @1.5m
SIZE	71(H) x 41.25(D) x 27.6(W) INCH 1800(H) x 1048(D) x 700(W) mm
CABINET WEIGHT	370 LBS
PER BATTERY STRING WEIGHT	529 LBS
BATTERY	NARADA 190AH (12NDT190) AGM TYPE (VRLA)
AC POWER	220VAC, 3.5AMP TYP 14.4AMP STARTING
DC POWER	10A MAX @48DVC

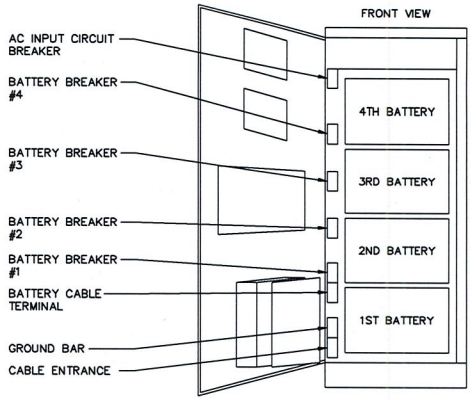

3 MMBS BBU CABINET

SCALE: NTS

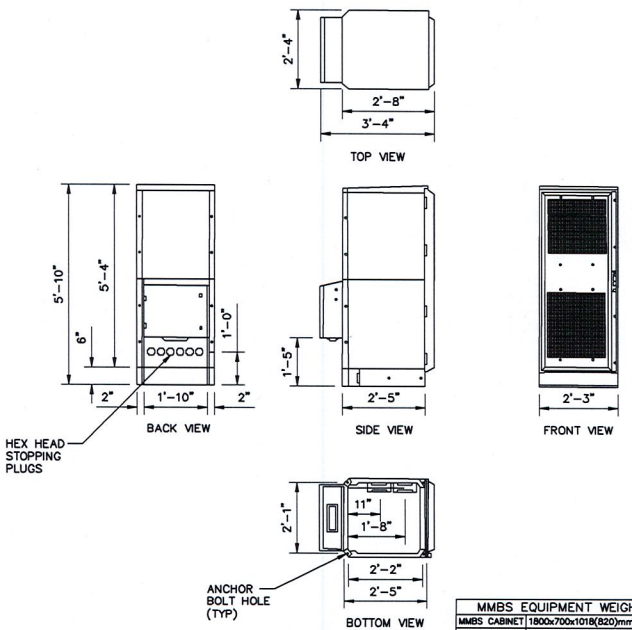

MMBS EQUIPMENT WEIGHT & DIMENSIONS		
MMBS CABINET	1800x700x1018(820)mm/70.8in x 29.5in x 40.1(37.0)in	
MMBS CABINET	251kg (553lbs) W/O DU SHELF	300kg W/4 DU SHELF

4 MMBS MECHANICAL SPECIFICATIONS

CALE: NTS

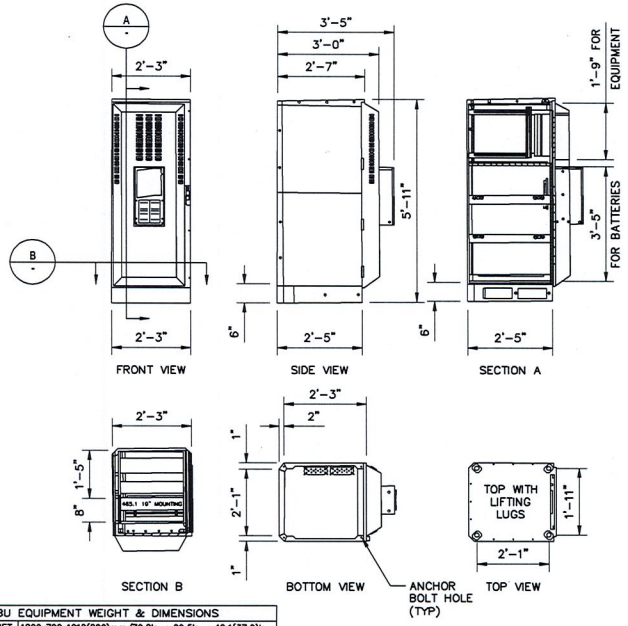

BBU EQUIPMENT WEIGHT & DIMENSIONS		
BBU CABINET	1800x700x1018(820)mm/70.8in x 29.5in x 40.1(37.0)in	
BBU CABINET	168kg (370lbs) W/O BATTERY	1136kg WITH BATTERY

5 BBU MECHANICAL SPECIFICATIONS

SCALE: NTS

Sprint®

SAMSUNG

REV.	DATE	REVISION DESCRIPTION	DRAWN BY	CHKD. BY
0	07-24-13	ISSUED FOR CONSTRUCTION	JAE	SEH
A	07-19-13	ISSUED FOR REVIEW	JAE	SEH

TeleCAD Wireless

1961 NORTHPOINT BLVD., SUITE 130
HIXSON, TN 37343
PH: 423-843-9500 FAX: 423-843-9509

I HEREBY CERTIFY THAT THIS PLAN, SPECIFICATION, OR REPORT WAS PREPARED BY ME OR UNDER MY DIRECT SUPERVISION AND THAT I AM A DULY LICENSED ARCHITECT UNDER THE LAWS OF THE STATE OF MINNESOTA

SIGNATURE: Stephen E. Hunt

PRINT NAME: STEPHEN E HUNT

DATE: 7/24/13 LICENSE # 47489

PROJECT INFORMATION:

NETWORK VISION MMBS LAUNCH

DULUTH LESTER PARK

MS03NP157

1814 N 51ST AVE E
DULUTH, MN 55804
SANT LOUIS COUNTY

DRAWN BY:	CHECKED BY:	DATE:
JAE	SEH	07-19-13

SHEET TITLE:

EQUIPMENT DETAILS
OUTDOOR SPECIFICATIONS

SHEET NUMBER: A-5

REV.: 0

DETAIL NOT USED

1 **ANTENNA SPECIFICATIONS - 800/1900 MHz**

CALE: NTS

DETAIL NOT USED

2 **DISH ANTENNA SPECIFICATIONS**

SCALE: NTS

DETAIL NOT USED

3 **ODU DETAIL**

SCALE: NTS

NOTES

1. MULTIPLE CONDUITS CAN BE PLACED IN THE SAME TRENCH AS LONG AS A MINIMUM SEPARATION PER THE LOCAL UTILITY COMPANIES IS MAINTAINED. IN ALL CASES THE MINIMUM CENTER TO CENTER SPACING BETWEEN CONDUITS IS 1'-0" (NOT REQUIRED FOR COAX).
2. CONTRACTOR SHALL RESTORE THE TRENCH TO ITS ORIGINAL CONDITIONS BY EITHER SEEDING OR SODDING GRASS AREAS. OR REPLACING ASPHALT OR CONCRETE AREAS TO ITS ORIGINAL CROSS SECTION.
3. IF SAW CUT IS NEEDED, OVER CUT BOTH SIDES OF TRENCH BY MINIMUM OF 6" TO AVOID DEPRESSION IN THE FUTURE

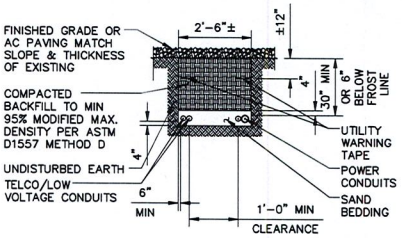

4 **UTILITY TRENCH DETAIL**

SCALE: NTS

DETAIL NOT USED

5 **ICE BRIDGE DETAIL**

CALE: NTS

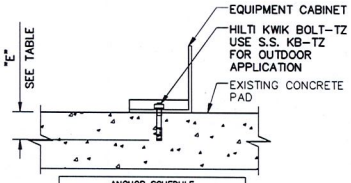

ANCHOR SCHEDULE		
BOLT DIA	HOLE DIA	"E" EMBEDMENT
3/8"	3/8"	2"
1/2"	1/2"	3"
5/8"	5/8"	3 1/8"
3/4"	3/4"	3 3/4"

NOTES:

1. THE CONTRACTOR SHALL ACCURATELY LOCATE ALL EXISTING REINFORCING BY X-RAY OR EQUIVALENT METHODS. NO REBAR OR TENDONS SHALL BE CUT. ALL EXPENSES RELATED TO REPAIR OR CUT REBAR OR TENDONS SHALL BE ENTIRELY AT THE EXPENSE OF THE CONTRACTOR.
2. SPECIAL INSPECTION IS REQUIRED FOR (HILTI KWIK BOLT-TZ PER ESR-1917) CONCRETE EXPANSION ANCHORS AGAINST SEISMIC.
3. INSTALLATION OF WEDGE ANCHORS IN MASONRY IS NOT ALLOWED.
4. VERIFY WITH CABINET MANUFACTURER FOR MOUNTING HOLE LOCATIONS.

5 **CABINET ANCHOR DETAIL**

CALE: NTS

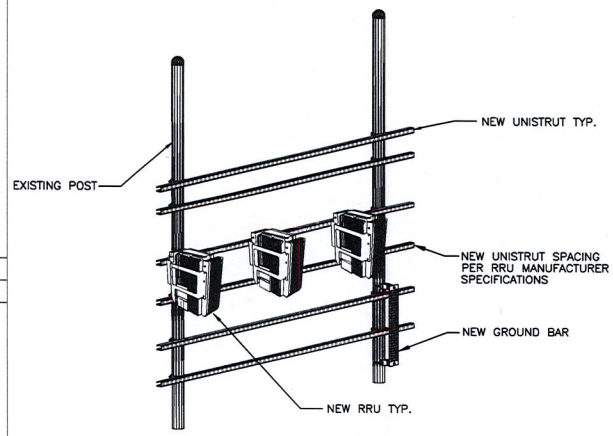

7 **RRU H-FRAME DETAIL**

SCALE: NTS

DETAIL NOT USED

8 **DETAIL NOT USED**

SCALE: NTS

Sprint®

SAMSUNG

REV.	DATE	REVISION DESCRIPTION	DRAWN BY	CHKD. BY
0	07-24-13	ISSUED FOR CONSTRUCTION	JAE	SEH
A	07-19-13	ISSUED FOR REVIEW	JAE	SEH

TeleCAD Wireless

1961 NORTHPOINT BLVD., SUITE 130
HIXSON, TN 37343
PH: 423-843-9500 FAX: 423-843-9509

I HEREBY CERTIFY THAT THIS PLAN, SPECIFICATION, OR REPORT WAS PREPARED BY ME OR UNDER MY DIRECT SUPERVISION AND THAT I AM A DULY LICENSED ARCHITECT UNDER THE LAWS OF THE STATE OF MINNESOTA

SIGNATURE: Stephen E. Hunt

PRINT NAME: STEPHEN E HUNT

DATE: 7/24/13 LICENSE # 47489

PROJECT INFORMATION:

NETWORK VISION MMBS LAUNCH

DULUTH LESTER PARK

MS03NP157

1814 N 51ST AVE E
DULUTH, MN 55804
SANT LOUIS COUNTY

DRAWN BY:	CHECKED BY:	DATE:
JAE	SEH	07-19-13

SHEET TITLE:

EQUIPMENT DETAILS

SHEET NUMBER: A-6

REV.: 0

TYPICAL COAX CABLE COLOR CODING SCHEME

SECTOR	CABLE	FIRST RING	SECOND RING	THIRD RING
1 ALPHA	1	GREEN	NO TAPE	NO TAPE
1	2	BLUE	NO TAPE	NO TAPE
1	3	BROWN	NO TAPE	NO TAPE
1	4	WHITE	NO TAPE	NO TAPE
1	5	RED	NO TAPE	NO TAPE
1	6	GREY	NO TAPE	NO TAPE
1	7	PURPLE	NO TAPE	NO TAPE
1	8	ORANGE	NO TAPE	NO TAPE
2 BETA	1	GREEN	GREEN	NO TAPE
2	2	BLUE	BLUE	NO TAPE
2	3	BROWN	BROWN	NO TAPE
2	4	WHITE	WHITE	NO TAPE
2	5	RED	RED	NO TAPE
2	6	GREY	GREY	NO TAPE
2	7	PURPLE	PURPLE	NO TAPE
2	8	ORANGE	ORANGE	NO TAPE
3 GAMMA	1	GREEN	GREEN	GREEN
3	2	BLUE	BLUE	BLUE
3	3	BROWN	BROWN	BROWN
3	4	WHITE	WHITE	WHITE
3	5	RED	RED	RED
3	6	GREY	GREY	GREY
3	7	PURPLE	PURPLE	PURPLE
3	8	ORANGE	ORANGE	ORANGE

1 COAX COLOR CODING

CALE: NTS

ALL COAXIAL CABLE IN RADIO ACCESS NETWORK SHALL BE MARKED AT THE TOP & BOTTOM WITH 2" COLORED TAPE, STENCIL TAG COLORED TAPE, OR COLORED HEAT SHRINK TUBING (UV STABILIZED TAPE OR HEAT SHRINK ARE PREFERRED). WRAP 2" COLORED TAPE A MINIMUM OF 3 TIMES AROUND THE COAX, AND KEEP THE TAPE IN THE SAME AREA AS MUCH AS POSSIBLE. THIS WILL ALLOW REMOVAL OF TAPE THAT FADES OR DISCOLORS DUE TO WEATHER.

FIRST SET (CABLE COLOR):
THE FIRST RING SHALL BE CLOSEST TO THE END OF THE CABLE, AND THERE SHALL BE A 1" SPACE BETWEEN EACH RING. THE CABLE COLOR CODE SHALL BE APPLIED IN ACCORDANCE TO TABLE, WHICH ONLY SHOWS 3 SECTORS, BUT ADDITIONAL SECTORS ARE EASILY SUPPORTED BY ADDING THE APPROPRIATE NUMBER OF COLORED RINGS TO THE CABLE COLOR CODE.

SECOND SET (FREQUENCY COLOR):
AFTER THE CABLE COLOR CODE IS APPLIED, THE FREQUENCY COLOR CODE MUST BE APPLIED FOR THE SPECIFIC FREQUENCY BAND IN USE ON A GIVEN LINE. A 2" GAP SHALL SEPARATE THE CABLE COLOR CODE FROM THE FREQUENCY COLOR CODE. THE 2" COLOR RINGS FOR THE FREQUENCY CODE SHALL BE PLACED NEXT TO EACH OTHER WITH NO SPACES.

RET CABLES DO NOT REQUIRE COLOR CODING

3 COLOR CODING NOTES

SCALE: NTS

FREQUENCY	INDICATOR	ID
800 #1	YELLOW	GREEN
1900 #1	YELLOW	RED
1900 #2	YELLOW	BROWN
1900 #3	YELLOW	BLUE
1900 #4	YELLOW	SLATE
800 #2	YELLOW	ORANGE
RESERVED #	YELLOW	WHITE
RESERVED	YELLOW	PURPLE

2 FREQUENCY COLOR CODING

SCALE: NTS

Sprint

SAMSUNG

REV.	DATE	REVISION DESCRIPTION	DRAWN BY	CHKD. BY
0	07-24-13	ISSUED FOR CONSTRUCTION	JAE	SEH
A	07-19-13	ISSUED FOR REVIEW	JAE	SEH

TeleCAD Wireless
1961 NORTHPOINT BLVD., SUITE 130
HIXSON, TN 37343
PH: 423-843-9500 FAX: 423-843-9509

I HEREBY CERTIFY THAT THIS PLAN, SPECIFICATION, OR REPORT WAS PREPARED BY ME OR UNDER MY DIRECT SUPERVISION AND THAT I AM A DULY LICENSED ARCHITECT UNDER THE LAWS OF THE STATE OF MINNESOTA

SIGNATURE

PRINT NAME: STEPHEN E HUNT

DATE: 7/24/13 LICENSE # 47489

PROJECT INFORMATION:
NETWORK VISION MMBS LAUNCH

DULUTH LESTER PARK

MS03NP157

1814 N 51ST AVE E
DULUTH, MN 55804
SANT LOUIS COUNTY

DRAWN BY:	CHECKED BY:	DATE:
JAE	SEH	07-19-13

SHEET TITLE:
COAX COLOR CODING

SHEET NUMBER: A-7

REV.: 0

ELECTRICAL NOTES

1. ALL ELECTRICAL WORK SHALL BE DONE IN ACCORDANCE WITH CURRENT NATIONAL ELECTRICAL CODES AND ALL LOCAL AND STATE CODE, LAWS, AND CORDINANCES. PROVIDE ALL COMPONENTS AND WIRING SIZES AS REQUIRED TO MEET NEC STANDARDS.
2. CONTRACTOR SHALL COORDINATE WITH LOCAL POWER COMPANY FOR REQUIREMENTS OF POWER SERVICE LINE TO THE METER BASE, WHEN REQUIRED. POWER SERVICE REQUIREMENT IS COMMERCIAL, AC NOMINAL 120/208 VOLT OR 120/240 VOLT, SINGLE PHASE WITH 200 AMP RATING.
3. CONTRACTOR SHALL COORDINATE WITH LOCAL TELEPHONE COMPANY FOR SERVICE LINE REQUIREMENTS TO TERMINATE AT THE PPC CABINET.
4. CONTRACTOR SHALL FURNISH AND INSTALL ELECTRIC METER BASE AND 200A DISCONNECT SWITCH PER SITE PLAN DETAIL DRAWINGS AND PER LOCAL UTILITY COMPANIES SPECIFICATION, WHEN REQUIRED. THE METER BASE SHOULD BE LOCATED IN A MANNER WHERE ACCESSIBLE BY THE LOCAL POWER COMPANY.
5. LOCAL POWER COMPANY SHALL PROVIDE 200 AMP ELECTRIC METER. CONTRACTOR SHALL COORDINATE INSTALLATION OF METER WITH LOCAL POWER COMPANY.
6. UNDERGROUND POWER AND TELCO SERVICE LINES SHALL BE ROUTED IN A COMMON TRENCH. ALL UNDERGROUND CONDUIT SHALL BE PVC SCHEDULE 40 AND CONDUIT EXPOSED ABOVE GROUND SHALL BE GALVANIZED RIGID STEEL TUBING UNLESS OTHERWISE INDICATED.
7. ALL TELCO CONDUIT LINES SHALL BE 4" SCH. 40 PVC CONDUIT UNLESS OTHERWISE INDICATED. THE TELCO CONDUIT FROM THE PPC SHALL BE ROUTED AND TERMINATED AT DESIGNATED TELCO DEMARCATION OR 2-FEET OUTSIDE FENCED AREA, NEAR UTILITY POLE (IN FENCED AREA), OR END CAP OFF AND PROVIDE MARKER STAKE PAINTED BRIGHT ORANGE WITH DESIGNATION FOR TELCO SERVICE.
8. CONDUITS INSTALLED AT PCS EQUIPMENT ENDS PRIOR TO THE EQUIPMENT INSTALLATION SHALL BE STUBBED AND CAPPED AT 6" ABOVE GRADE OR PLATFORM. IF SERVICE LINES CAN'T BE INSTALLED INITIALLY, PROVIDE NYLON PULL CORD IN CONDUITS.
9. THE SPRINT CABINET, INCLUDING 200 AMP LOAD PANEL AND TELCO PANEL, SHALL BE PROVIDED BY OWNER AND INSTALLED BY THE CONTRACTOR. CONTRACTOR IS TO INSTALL BREAKER(S) NOT PROVIDED BY MANUFACTURER. SEE PANEL SCHEDULE ON THIS SHEET FOR BREAKER REQUIREMENTS.
10. LOCATION OF ELECTRIC METER AND DISCONNECT SWITCH TO BE PROVIDED BY GENERAL CONTRACTOR.
11. #2 WIRE TO BE UTILIZED IN ELECTRIC SERVICE RUNS EXCEEDING 100'.
12. CONTRACTOR SHALL INSPECT THE EXISTING CONDITIONS PRIOR TO SUBMITTING BID. ANY QUESTIONS ARISING DURING THE BID PERIOD IN REGARDS TO THE CONTRACTORS FUNCTIONS, THE SCOPE OF WORK, OR ANY OTHER ISSUE RELATED TO THIS PROJECT SHALL BE BROUGHT UP DURING THE BID PERIOD WITH THE PROJECT MANAGER FOR CLARIFICATION, NOT AFTER THE CONTRACT HAS BEEN AWARDED.
13. LOCATION OF EQUIPMENT, CONDUIT AND DEVICES SHOWN ON THE DRAWINGS ARE APPROXIMATE AND SHALL BE COORDINATED WITH FIELD CONDITIONS PRIOR TO ROUGH-IN.
14. THE CONDUIT RUNS AS SHOWN ON THE PLANS ARE APPROXIMATE. EXACT LOCATION AND ROUTING SHALL BE PER EXISTING FIELD CONDITIONS.
15. PROVIDE PULL BOXES AND JUNCTION BOXES WHERE SHOWN OR REQUIRED BY NEC.

ELECTRICAL NOTES (CON'T)

16. ALL CONDUITS SHALL BE MET WITH BENDS MADE IN ACCORDANCE WITH NEC TABLE 346-10. NO RIGHT ANGLE DEVICE OTHER THAN STANDARD CONDUIT ELBOWS WITH 12" MINIMUM INSIDE SWEEPS FOR ALL CONDUITS 2" OR LARGER.
17. ALL CONDUIT TERMINATIONS SHALL BE PROVIDED WITH PLASTIC THROAT INSULATING GROUNDING BUSHINGS.
18. ALL WIRE SHALL BE "TYPE THWN, SOLID, ANNEALED COPPER UP TO SIZE 1/10 AWG (18 AND LARGER SHALL BE CONCENTRIC STRANDED) 75 DEGREE C, (167 DEGREES F), 98" CONDUCTIVITY, MINIMUM #12.
19. ALL WIRES SHALL BE TAGGED AT ALL PULL BOXES, J-BOXES, EQUIPMENT BOXES AND CABINETS WITH APPROVED PLASTIC TAGS, ACTION CRAFT, BRADY, OR APPROVED EQUAL.
20. ALL NEW MATERIAL SHALL HAVE A U.L. LABEL.
21. CONDUIT ROUGH-IN SHALL BE COORDINATED WITH THE MECHANICAL EQUIPMENT TO AVOID LOCATION TO CONFLICTS. VERIFY WITH MECHANICAL CONTRACTOR AND COMPLY AS REQUIRED.
22. ALL PANEL DIRECTORIES SHALL BE TYPEWRITTEN NOT HAND WRITTEN.
23. INSTALL AN EQUIPMENT GROUNDING CONDUCTOR IN ALL CONDUITS PER THE SPECIFICATIONS AND NEC. THE EQUIPMENT GROUNDING CONDUCTORS SHALL BE BONDED AT ALL JUNCTION BOXES, PULLBOXES, AND ALL DISCONNECT SWITCHES, STARTERS, AND EQUIPMENT CABINETS.
24. THE CONTRACTOR SHALL PREPARE AS-BUILT DRAWINGS, DOCUMENT ANY AND ALL WIRING AND EQUIPMENT CONDITIONS AND CHANGES WHILE COMPLETING THIS CONTRACT. SUBMIT AT SUBSTANTIAL COMPLETION.
25. ALL DISCONNECT SWITCHES AND OTHER CONTROLLING DEVICES SHALL BE PROVIDED WITH ENGRAVED PHENOLIC NAMEPLATES INDICATING EQUIPMENT CONTROLLED, BRANCH CIRCUITS INSTALLED ON, AND PANEL FIELD LOCATIONS FED FROM (NO EXCEPTIONS.) PROVIDE SAMPLE FOR CONSTRUCTION MANAGER'S APPROVAL.
26. ALL ELECTRICAL DEVICES AND INSTALLATIONS OF THE DEVICES SHALL COMPLY WITH (ADA) AMERICANS WITH DISABILITIES ACT AS ADOPTED BY THE APPLICABLE STATE.
27. PROVIDE CORE DRILLING AS NECESSARY FOR PENETRATIONS OR RISERS THROUGH BUILDING. DO NOT PENETRATE STRUCTURAL MEMBERS WITHOUT CONSTRUCTION MANAGERS APPROVAL. SLEEVES AND/OR PENETRATIONS IN FIRE RATED CONSTRUCTION SHALL BE PACKED WITH FIRE RATED MATERIAL WHICH SHALL MAINTAIN THE FIRE RATING OF THE WALL OR STRUCTURE. FILL FOR FLOOR PENETRATIONS SHALL PREVENT PASSAGE OF WATER, SMOKE, FIRE AND FUMES. ALL MATERIAL SHALL BE UL APPROVED FOR THIS PURPOSE.
28. ELECTRICAL CHARACTERISTICS OF ALL EQUIPMENT (NEW AND EXISTING) SHALL BE FIELD VERIFIED WITH THE OWNER'S REPRESENTATIVE AND EQUIPMENT SUPPLIER PRIOR TO ROUGH-IN OF CONDUIT AND WIRE. ALL EQUIPMENT SHALL BE PROPERLY CONNECTED ACCORDING TO THE NAMEPLATE DATA FURNISHED ON THE EQUIPMENT (THE DESIGN OF THESE PLANS ARE BASED UPON BEST AVAILABLE INFORMA11ON AT THE TIME OF DESIGN AND SOME EQUIPMENT CHARACTERISTICS MAY VARY FROM DESIGN AS SHOWN ON THESE DRAWINGS).
29. LOCATION OF ALL OUTLET, BOXES, ETC., AND THE TYPE OF CONNECTION (PLUG OR DIRECT) SHALL BE CONFIRMED WITH THE OWNER'S REPRESENTATIVE PRIOR TO ROUGH-IN.

1 **ELECTRICAL NOTES**

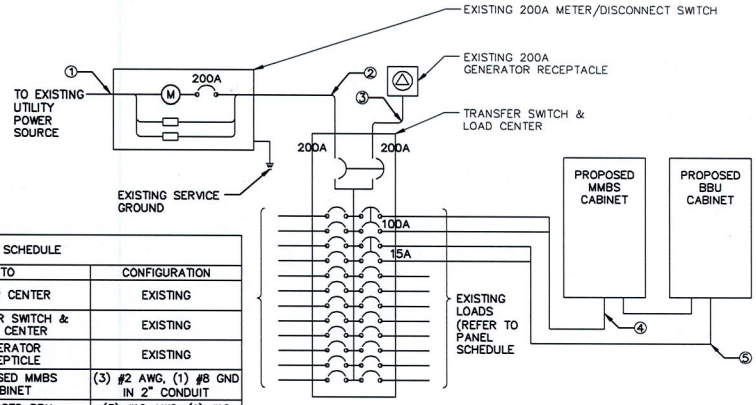

CIRCUIT SCHEDULE			
NO	FROM	TO	CONFIGURATION
1	SOURCE	METER CENTER	EXISTING
2	METER/DSC	TRANSFER SWITCH & LOAD CENTER	EXISTING
3	TRANSFER SWITCH & LOAD CENTER	GENERATOR RECEPTICLE	EXISTING
4	TRANSFER & LOAD CENTER SUB-PANEL	PROPOSED MMBS CABINET	(3) #2 AWG, (1) #8 GND IN 2" CONDUIT
5	TRANSFER & LOAD CENTER SUB-PANEL	PROPOSED BBU CABINET	(3) #10 AWG, (1) #10 GND IN 1" CONDUIT

2 **ELECTRICAL ONE-LINE DIAGRAM**

SITE NUMBER:	TBD	MODEL NUMBER:	TBD
VOLTAGE:	240V/120	PHASE:	1
MAIN BREAKER:	200 AMP	BUSS RATING:	200 AMPS
MOUNT:	SURFACE	NEUTRAL BAR:	YES
ENCLOSURE TYPE:	NEMA 3R	N TO GROUND BOND:	TBD
PANEL STATUS:	EXISTING	INTERNAL TVSS:	TBD
WIRE:	3	A/C:	TBD
GROUND BAR:	TBD		

CKT	LOAD DESCRIPTION	BREAKER AMPS	BREAKER POLES	BREAKER STATUS	BREAKER STATUS	BREAKER POLES	BREAKER AMPS	LOAD DESCRIPTION	CKT
1	BTS CABINET PCS	100	2	ON	ON	2	60	MAIN	2
3									4
5	FLAGLIGHTS	15	1	ON	NEW	2	100	SAMSUNG MMBS	6
7									8
9	SAMSUNG BBU	15	2	NEW	ON	1	15	OUTLETS	10
11	TELCO FAN	10	1	ON	N/A	BLANK	N/A	N/A	12

NOTES
GENERAL CONTRACTOR TO CHECK REQUIREMENTS WITH LOCAL POWER COMPANY AND JURISDICTION. ADDITIONAL SUB PANEL OFF THE PPC CABINET MIGHT BE REQUIRED TO FEED NEW NETWORK VISION EQUIPMENT.

3 **PANEL SCHEDULE**

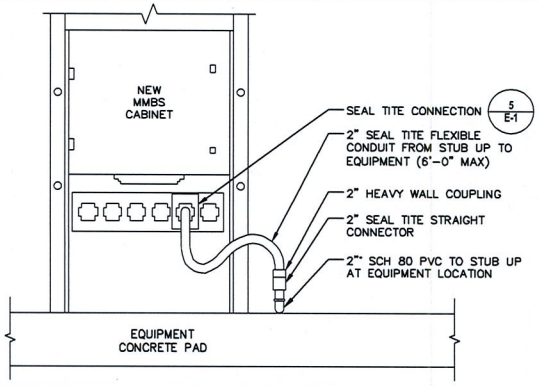

4 **TYPICAL EQUIPMENT POWER CONDUIT CONNECTIONS**

SCALE: NTS

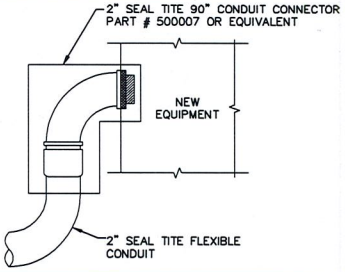

5 **SEAL TITE CONDUIT CONNECTION**

SCALE: NTS

Sprint®

SAMSUNG

REV.	DATE	REVISION DESCRIPTION	DRAWN BY	CHKD. BY
0	07-24-13	ISSUED FOR CONSTRUCTION	JAE	SEH
A	07-19-13	ISSUED FOR REVIEW	JAE	SEH

TeleCAD Wireless
1961 NORTHPOINT BLVD., SUITE 130
HIXSON, TN 37343
PH: 423-843-9500 FAX: 423-843-9509

I HEREBY CERTIFY THAT THIS PLAN, SPECIFICATION, OR REPORT WAS PREPARED BY ME OR UNDER MY DIRECT SUPERVISION AND THAT I AM A DULY LICENSED ARCHITECT UNDER THE LAWS OF THE STATE OF MINNESOTA

SIGNATURE: Stephen E. Hunt

PRINT NAME: STEPHEN E HUNT

DATE: 7/24/13 LICENSE # 47489

PROJECT INFORMATION:
NETWORK VISION MMBS LAUNCH

DULUTH LESTER PARK

MS03NP157

1814 N 51ST AVE E
DULUTH, MN 55804
SANT LOUIS COUNTY

DRAWN BY:	CHECKED BY:	DATE:
JAE	SEH	07-19-13

SHEET TITLE:
ONE-LINE DIAGRAM & POWER PANEL SCHEDULE

SHEET NUMBER: E-1

REV.: 0

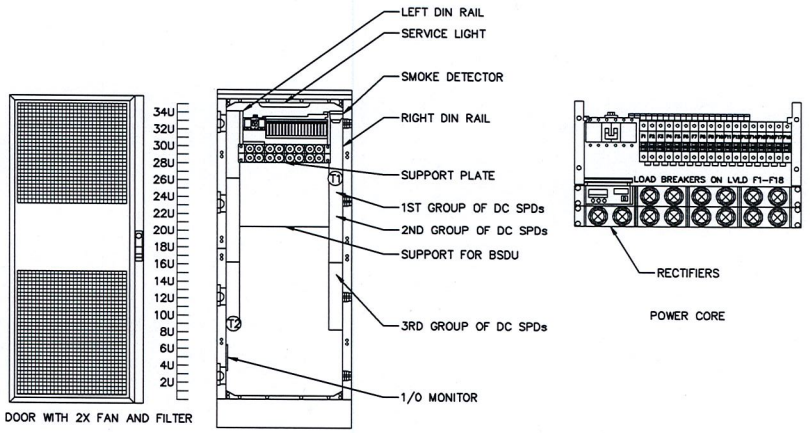

1 **MMBS-BBU ELECTRICAL DETAILS**

CALE: NTS

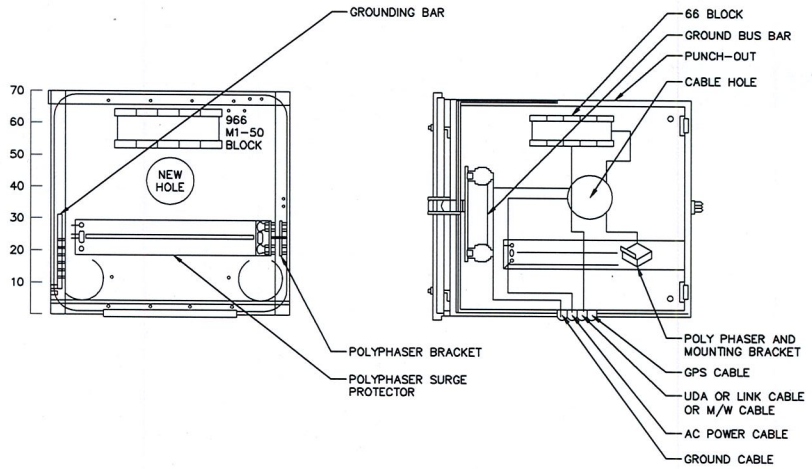

2 **MUDROOM ELECTRICAL DETAIL**

SCALE: NTS

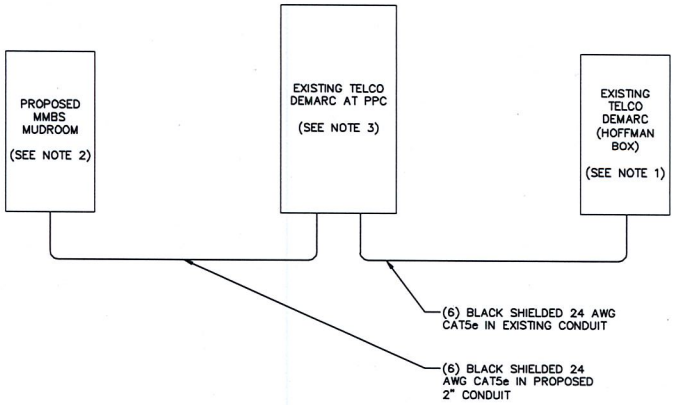

NOTES:

1. CONTRACTOR TO INSTALL NEW 66 BLOCK IN EXISTING HOFFMAN BOX AT SITES MAIN TELCO DEMARC.
2. CONTRACTOR SHALL INSTALL RJ-45 ENDS ON ALL (6) RUNS OF CAT5E INTO MMBS-BBU MUDROOM.
3. CONTRACTOR TO INSTALL NEW 66 BLOCK IN EXISTING TELCO BOX NEXT TO EXISTING PPC CABINET.

3 **TELCO RISER DETAIL**

CALE: NTS

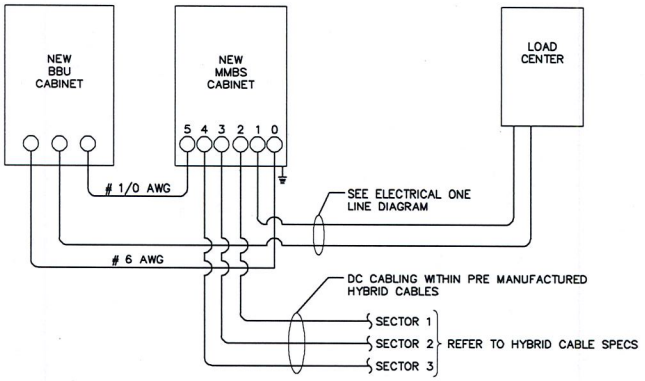

DC POWER ELECTRICAL NOTES:

MINIMUM CABLE LENGTH BETWEEN THE OU AND BATTERY IS 70MM (2.75 in)
MAXIMUM CABLE LENGTH DISTANCE IS 900mm (35.43 in).
WEATHER PROOFING SHALL INCORPORATE PPC WEATHERPROOFING TAPE KIT, COLD SHRINK SHALL NOT BE USED.
ROUTE DC CONDUCTORS IN CONDUITS TO NEW MMBS CABINET 48VDC POWER DISTRIBUTION PANEL TO AND FROM NEW BBU CABINET.
-48 VDC CABLES BETWEEN NEW MMBS CABINET & RRU'S ARE FACTORY ASSEMBLED AND EQUIPED WITH ONE PRE-TERMINATED END.
ALL FIELD INSTALLED OC CABLING SHALL BE TYPE RHH/RHW AND SHALL BE UL THERMOSET INSULATED.

MMBS PORT LAYOUT

CONDUIT #	USAGE
0	BATTERY
1	AC/GROUND
2	RRU SECTOR 1
3	RRU SECTOR 2
4	RRU SECTOR 3
5	BATTERY

4 **DC POWER DIAGRAM**

Sprint®

SAMSUNG

REV.	DATE	REVISION DESCRIPTION	DRAWN BY	CHKD. BY
0	07-24-13	ISSUED FOR CONSTRUCTION	JAE	SEH
A	07-19-13	ISSUED FOR REVIEW	JAE	SEH

TeleCAD Wireless
1961 NORTHPOINT BLVD., SUITE 130
HIXSON, TN 37343
PH: 423-843-9500 FAX: 423-843-9509

I HEREBY CERTIFY THAT THIS PLAN, SPECIFICATION, OR REPORT WAS PREPARED BY ME OR UNDER MY DIRECT SUPERVISION AND THAT I AM A DULY LICENSED ARCHITECT UNDER THE LAWS OF THE STATE OF MINNESOTA

SIGNATURE: Stephen E. Hunt

PRINT NAME: STEPHEN E HUNT

DATE: 7/24/13 LICENSE # 47489

PROJECT INFORMATION:

NETWORK VISION MMBS LAUNCH

DULUTH LESTER PARK

MS03NP157

1814 N 51ST AVE E
DULUTH, MN 55804
SANT LOUIS COUNTY

DRAWN BY:	CHECKED BY:	DATE:
JAE	SEH	07-19-13

SHEET TITLE: ELECTRICAL DETAILS

SHEET NUMBER: E-2

REV.: 0

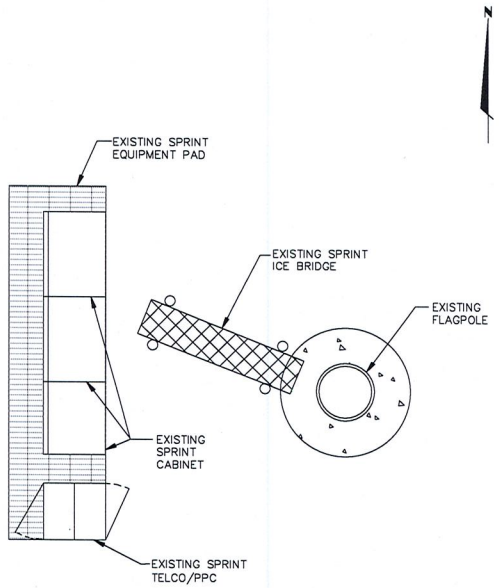

1 **EQUIPMENT GROUND & ROUTING PLAN (EXISTING)**

1x17 SCALE: 1"=10' 24x36 SCALE: 1"=5'

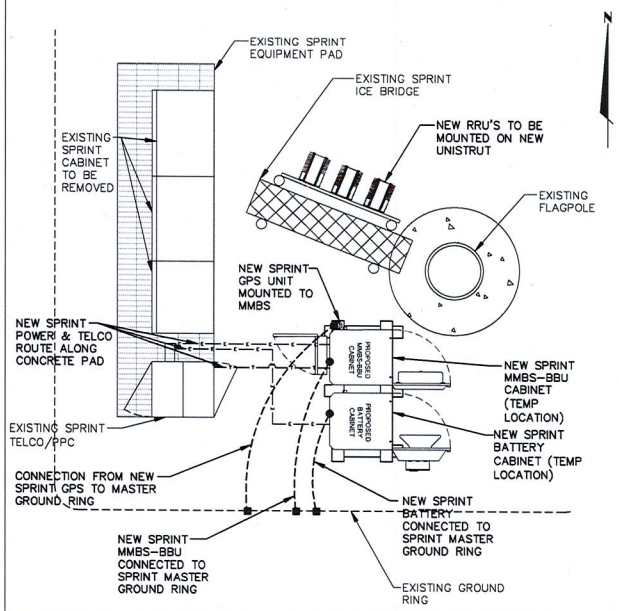

2 **EQUIPMENT GROUND & ROUTING PLAN (INTERIM) IF REQUIRED**

11x17 SCALE: 1"=10' 24x36 SCALE: 1"=5'

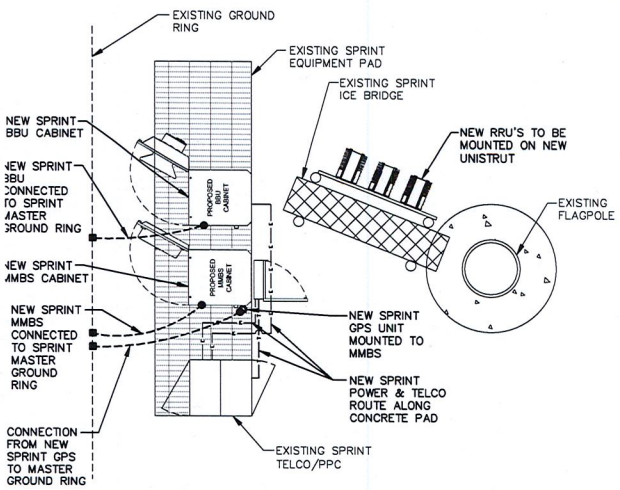

1 **EQUIPMENT GROUND & ROUTING PLAN (FINAL)**

1x17 SCALE: 1"=10' 24x36 SCALE: 1"=5'

LEGEND	
■	EXOTHERMIC CONNECTION
●	MECHANICAL CONNECTION
▭	ANTENNA GROUND BAR
▬	MASTER GROUND BAR

NOTE:
1. CONTRACTOR TO REPLACE ALL MISSING GROUND BARS AND GROUNDING CONNECTIONS AS REQUIRED.

2 **EQUIPMENT GROUND & ROUTING NOTES**

GENERAL GROUNDING NOTES:

1. ALL DETAILS ARE SHOWN IN GENERAL TERMS. ACTUAL INSTALLATION AND CONSTRUCTION MAY VARY DUE TO SITE SPECIFIC CONDITIONS.
2. GROUND ALL ANTENNA BASES, FRAMES, CABLE RUNS, AND OTHER METALLIC COMPONENTS USING GROUND WIRES AND CONNECT TO SURFACE MOUNTED BUS BARS. FOLLOW ANTENNA AND BTS MANUFACTURERS PRACTICES FOR GROUNDING REQUIREMENTS. GROUND COAX SHIELD AT BOTH ENDS AND EXIT FROM TOWER OR POLE USING MFR'S PRACTICES.
3. ALL GROUND CONNECTIONS SHALL BE EXOTHERMIC. ALL WIRES SHALL BE COPPER THHN/THWN. ALL GROUND WIRE SHALL BE GREEN INSULATED WIRE ABOVE GROUND.
4. CONTRACTOR TO VERIFY AND TEST GROUND TO SOURCE. GROUNDING AND OTHER OPERATIONAL TESTING WILL BE WITNESSED BY SPRINT WIRELESS, LLC. REPRESENTATIVE.
5. REFER TO DIVISION 16 GENERAL ELECTRIC; GENERAL ELECTRICAL PROVISION AND COMPLY WITH ALL REQUIREMENTS OF GROUNDING STANDARDS.
6. ELECTRICAL CONTRACTOR TO PROVIDE DETAILED DESIGN OF GROUNDING SYSTEM PER SPRINT STANDARD GROUNDING METHOD, AND RECEIVE APPROVAL OF DESIGN BY AUTHORIZED SPRINT MOBILITY REPRESENTATIVE, PRIOR TO INSTALLATION OF GROUNDING SYSTEM. PHOTO DOCUMENT ALL EXOTHERMIC AND GROUND RING
7. NOTIFY CONSTRUCTION MANAGER IF THERE ARE ANY DIFFICULTIES INSTALLING GROUNDING SYSTEM DUE TO SITE SOIL CONDITIONS.
8. ALL EXISTING GROUND BARS, WIRES & CONNECTIONS SHALL BE FIELD VERIFIED. ANY DEFICIENT ITEMS SHALL BE REPLACED AS REQUIRED TO ACHIEVE ADEQUATE GROUNDING REQUIRED BY SPRINT.

GROUNDING NOTES:

1. EXOTHERMIC WELDS (2). 2 AWG BARE TINNED SOLID COPPER CONDUCTORS TO GROUNDING BAR. ROUTE CONDUCTORS TO BURIED GROUNDING RING AND PROVIDE PARALLEL EXOTHERMIC WELD.
2. EC SHALL USE PERMANENT MARKER TO DRAW THE LINES BETWEEN EACH SECTION AND LABEL EACH SECTION ("P", "A", "N", "I") WITH 1" HIGH LETTERS.
3. ALL HARDWARE 18-8 STAINLESS STEEL, INCLUDING LOCK WASHERS, COAT ALL SURFACES WITH AN ANTI-OXIDANT COMPOUND BEFORE MATING. ALL HARDWARE SHALL BE STAINLESS STEEL 3/8 INCH DIAMETER OR LARGER.
4. FOR GROUND BOND TO STEEL ONLY: INSERT A CADMIUM FLAT WASHER BETWEEN LUG AND STEEL, COAT ALL SURFACES WITH AN ANTI-OXIDANT COMPOUND BEFORE MATING.
5. NUT & WASHER SHALL BE PLACED ON THE FRONT SIDE OF THE GROUNDING BAR AND BOLTED ON THE BACK SIDE. INSTALL BLACK HEAT-SHRINKING TUBE, 600 VOLT INSULATION ON ALL GROUNDING TERMINATIONS. THE INTENT IS TO WEATHERPROOF THE COMPRESSION CONNECTION.
6. NUMBER OF GROUNDING BARS MAY VARY DEPENDING ON THE TYPE OF TOWER, ANTENNA LOCATION, AND CONNECTION ORIENTATION. PROVIDE AS REQUIRED.
7. GROUNDING KIT SHALL BE TYPE AND PART NUMBER AS SUPPLIED OR RECOMMENDED BY CABLE MANUFACTURER.
8. WEATHERPROOFING SHALL BE TYPE AND PART NUMBER AS SUPPLIED OR RECOMMENDED BY CABLE MANUFACTURER.
9. SUPPLIED AND INSTALLED BY CONTRACTOR.
10. WHEN THE SCOPE OF WORK REQUIRES THE ADDITION OF A GROUNDING BAR TO AN EXISTING TOWER, THE SUBCONTRACTOR SHALL OBTAIN APPROVAL FROM THE TOWER OWNER PRIOR TO MOUNTING THE GROUNDING BAR TO THE TOWER.
11. EXTEND TWO (2) 2 AWG TINNED CU CONDUCTOR FROM BURIED GROUNDING RING AND CONNECT TO THE PROPOSED TOWER. FOLLOW MANUFACTURERS RECOMMENDATIONS FOR GROUNDING CONNECTIONS TO THE TOWER. (APPLICABLE TO NEW TOWERS ONLY.)
12. NUMBER OF GROUNDING BARS MAY VARY DEPENDING ON THE TYPE OF TOWER, ANTENNA LOCATION, AND CONNECTION ORIENTATION. THE SUBCONTRACTOR SHALL BE RESPONSIBLE FOR INSTALLING ADDITIONAL GROUNDING BARS AS REQUIRED, PROVIDING 50% SPARE CONNECTION POINTS.
13. EXPOSED GROUND WIRES TO BE NON METALLIC LIQUID TIGHT.

4 **GROUNDING NOTES**

Sprint®

SAMSUNG

REV.	DATE	REVISION DESCRIPTION	DRAWN BY	CHKD. BY
0	07-24-13	ISSUED FOR CONSTRUCTION	JAE	SEH
A	07-19-13	ISSUED FOR REVIEW	JAE	SEH

TeleCAD Wireless
1961 NORTHPOINT BLVD., SUITE 130
HIXSON, TN 37343
PH: 423-843-9500 FAX: 423-843-9509

I HEREBY CERTIFY THAT THIS PLAN, SPECIFICATION, OR REPORT WAS PREPARED BY ME OR UNDER MY DIRECT SUPERVISION AND THAT I AM A DULY LICENSED ARCHITECT UNDER THE LAWS OF THE STATE OF MINNESOTA

SIGNATURE: Stephen E. Hunt

PRINT NAME: STEPHEN E HUNT

DATE: 7/24/13 LICENSE # 47489

PROJECT INFORMATION:

NETWORK VISION MMBS LAUNCH

DULUTH LESTER PARK

MS03NP157

1814 N 51ST AVE E
DULUTH, MN 55804
SANT LOUIS COUNTY

DRAWN BY:	CHECKED BY:	DATE:
JAE	SEH	07-19-13

SHEET TITLE: GROUNDING & ROUTING PLANS

SHEET NUMBER: E-3

REV.: 0

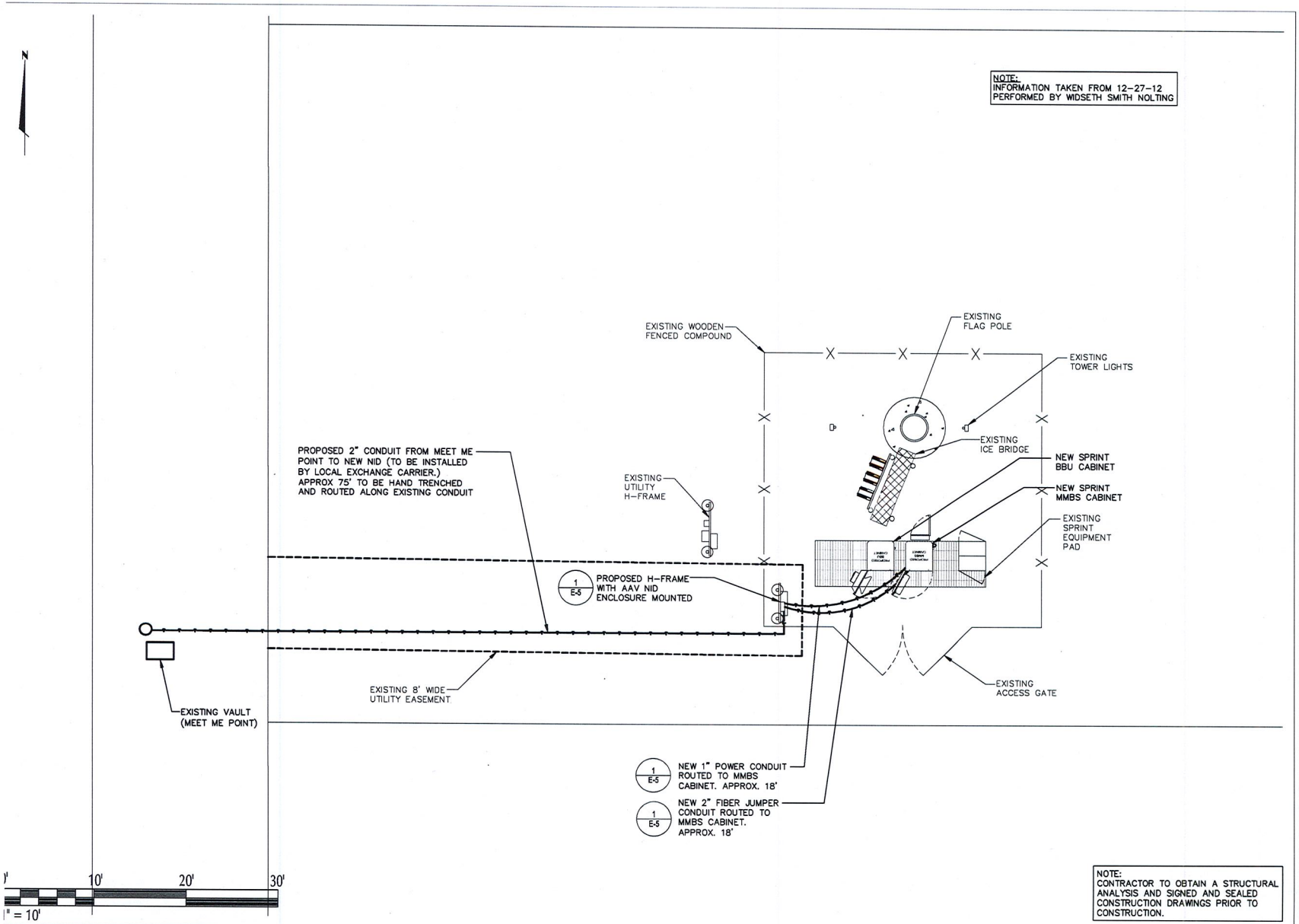

1 COMPOUND PLAN - FINAL

1x17 SCALE: 1"=10' | 24x36 SCALE: 1"=5'

Sprint

SAMSUNG

REV.	DATE	REVISION DESCRIPTION	DRAWN BY	CHKD. BY
0	07-24-13	ISSUED FOR CONSTRUCTION	JAE	SEH
A	07-19-13	ISSUED FOR REVIEW	JAE	SEH

TeleCAD Wireless
1961 NORTHPOINT BLVD., SUITE 130
HIXSON, TN 37343
PH: 423-843-9500 FAX: 423-843-9509

I HEREBY CERTIFY THAT THIS PLAN, SPECIFICATION, OR REPORT WAS PREPARED BY ME OR UNDER MY DIRECT SUPERVISION AND THAT I AM A DULY LICENSED ARCHITECT UNDER THE LAWS OF THE STATE OF MINNESOTA

SIGNATURE: Stephen E. Hunt

PRINT NAME: STEPHEN E HUNT

DATE: 7/24/13 LICENSE # 47489

PROJECT INFORMATION:

NETWORK VISION MMBS LAUNCH

DULUTH LESTER PARK

MS03NP157

1814 N 51ST AVE E
DULUTH, MN 55804
SANT LOUIS COUNTY

DRAWN BY:	CHECKED BY:	DATE:
JAE	SEH	07-19-13

SHEET TITLE:

AAV ROUTING PLAN

SHEET NUMBER: E-4

REV.: 0

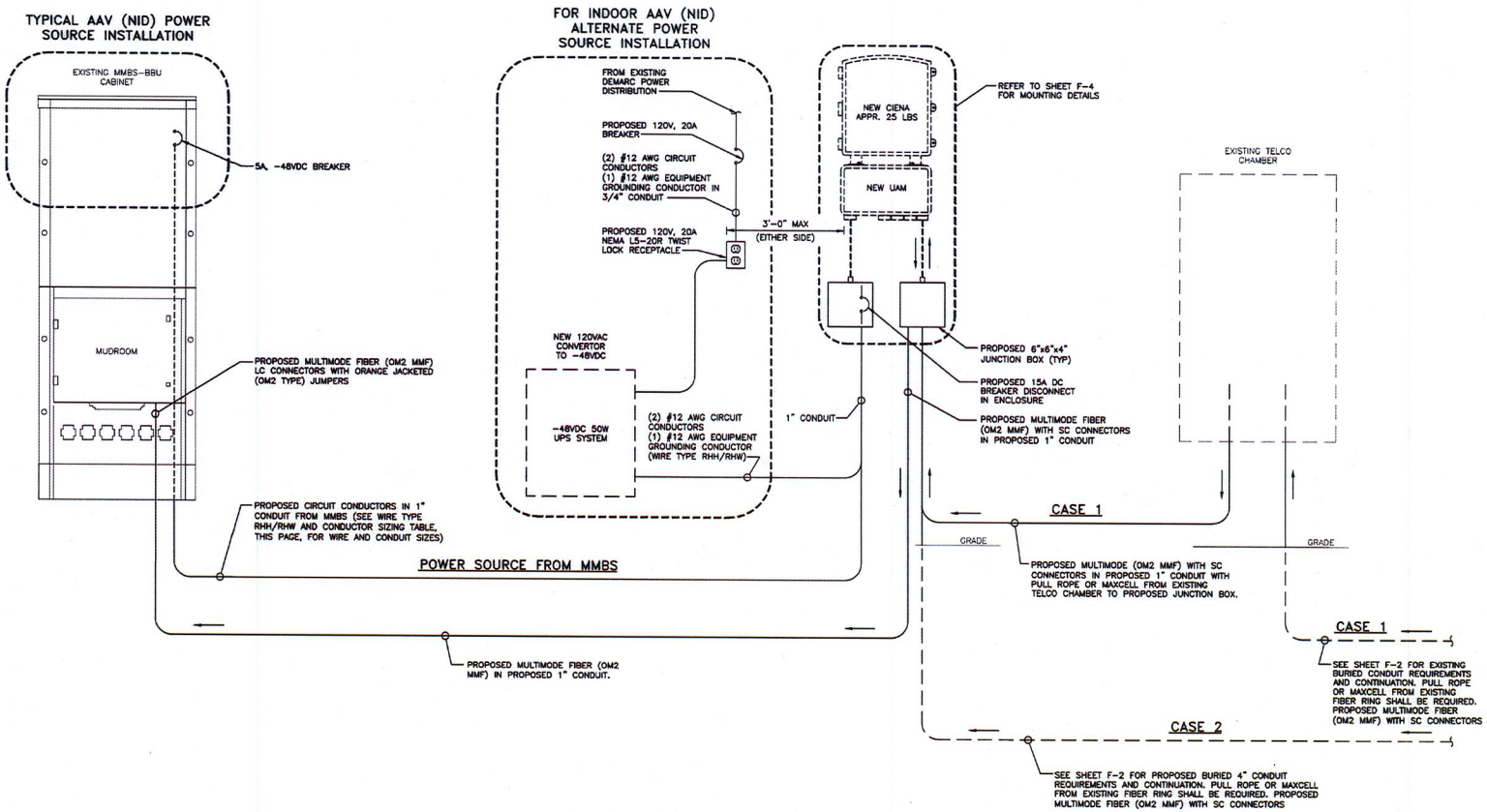

NOTES

1. CONTRACTOR SHALL FOLLOW ALL LOCAL MUNICIPAL CODES FOR CONDUIT SPECIFICATION AND INSTALLATION.
2. ALL UNISTRUT ENDS SHALL BE COLD-GALVINIZED AND CAPPED.
3. ALL INTERIOR CONDUITS SHALL BE EMT.
4. ALL ABOVE GROUND CONDUIT SHALL BE RIGID.
5. CASE 1 – FIBER PATH TO BE USED IF EXISTING CONDUIT FROM "MEET-ME POINT" TO EXISTING TELCO CABINET EXIST.
6. CASE 2 – FIBER PATH TO BE USED IF EXISTING CONDUIT FROM "MEET-ME POINT" TO EXISTING TELCO CABINET IS NOT AVAILABLE OR IF EXISTING CONDUIT DOES NOT HAVE ENOUGH CAPACITY FOR PROPOSED FIBER RUN.

WIRE TYPE RHH/RHW AND CONDUCTOR SIZING TABLE (48VDC @ 96W/2.0 AMPS)

DISTANCE (FT)	0'–180'	180'–280'	280'–460'	460'–720'
CIRCUIT CONDUCTOR SIZE	(2) #12 AWG	(2) #10 AWG	(2) #8 AWG	(2) #6 AWG
GND CONDUCTOR SIZE	(1) #12 AWG	(1) #12 AWG	(1) #12 AWG	(1) #10 AWG
CONDUIT SIZE	1"	1"	1"	1"

1 AAV (NID) ENCLOSURE ONE-LINE DIAGRAM

CALE: NTS

Sprint®

SAMSUNG

REV.	DATE	REVISION DESCRIPTION	DRAWN BY	CHKD. BY
0	07-24-13	ISSUED FOR CONSTRUCTION	JAE	SEH
A	07-19-13	ISSUED FOR REVIEW	JAE	SEH

TeleCAD Wireless
1961 NORTHPOINT BLVD., SUITE 130
HIXSON, TN 37343
PH: 423-843-9500 FAX: 423-843-9509

I HEREBY CERTIFY THAT THIS PLAN, SPECIFICATION, OR REPORT WAS PREPARED BY ME OR UNDER MY DIRECT SUPERVISION AND THAT I AM A DULY LICENSED ARCHITECT UNDER THE LAWS OF THE STATE OF MINNESOTA

SIGNATURE: Stephen E. Hunt

PRINT NAME: STEPHEN E HUNT

DATE 7/24/13 LICENSE # 47489

PROJECT INFORMATION:

NETWORK VISION MMBS LAUNCH

DULUTH LESTER PARK

MS03NP157

1814 N 51ST AVE E
DULUTH, MN 55804
SANT LOUIS COUNTY

DRAWN BY:	CHECKED BY:	DATE:
JAE	SEH	07-19-13

SHEET TITLE: AAV DETAILS

SHEET NUMBER: E-5

REV.: 0

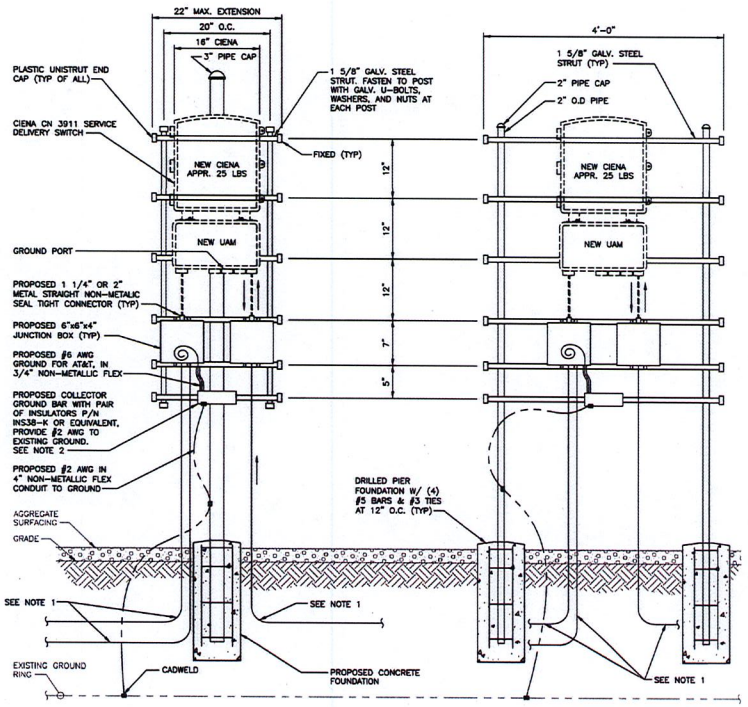

POLE MOUNT

H-FRAME MOUNT

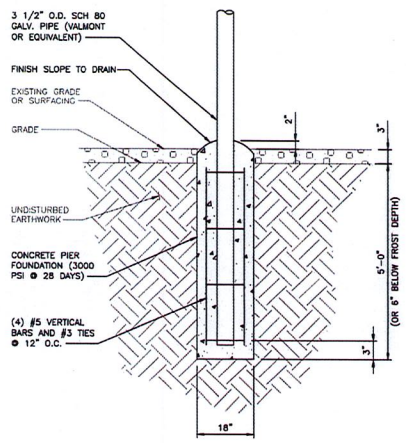

SINGLE PIER

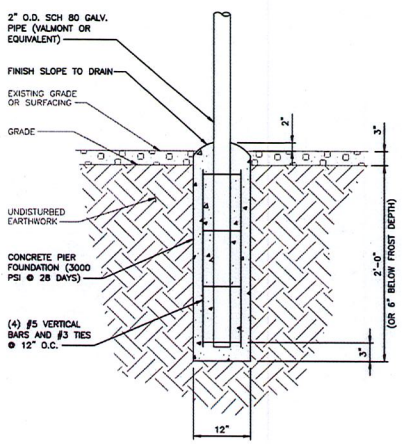

DUAL PIER
(FOR H-FRAME MOUNT)

NOTES

1. REFER TO SHEET F-3 FOR CONDUIT ROUTING DETAIL.
2. CONTRACTOR TO SUPPLY GROUND TO NEAREST ACCESSIBLE MASTER GROUND OR MAIN GROUNDING SYSTEM.

1	POLE AND H-FRAME AAV (NID) INSTALLATION DETAILS (AS REQUIRED)
CALE: NTS	

2	CONCRETE FOUNDATION DETAILS(AS REQUIRED)
SCALE: NTS	

Sprint®

SAMSUNG

REV.	DATE	REVISION DESCRIPTION	DRAWN BY	CHKD. BY
0	07-24-13	ISSUED FOR CONSTRUCTION	JAE	SEH
A	07-19-13	ISSUED FOR REVIEW	JAE	SEH

TeleCAD Wireless
1961 NORTHPOINT BLVD., SUITE 130
HIXSON, TN 37343
PH: 423-843-9500 FAX: 423-843-9509

I HEREBY CERTIFY THAT THIS PLAN, SPECIFICATION, OR REPORT WAS PREPARED BY ME OR UNDER MY DIRECT SUPERVISION AND THAT I AM A DULY LICENSED ARCHITECT UNDER THE LAWS OF THE STATE OF MINNESOTA

SIGNATURE: S E Hunt

PRINT NAME: STEPHEN E HUNT

DATE 7/24/13 LICENSE # 47489

PROJECT INFORMATION:

NETWORK VISION MMBS LAUNCH

DULUTH LESTER PARK

MS03NP157

1814 N 51ST AVE E
DULUTH, MN 55804
SANT LOUIS COUNTY

DRAWN BY:	CHECKED BY:	DATE:
JAE	SEH	07-19-13

SHEET TITLE:

AAV DETAILS

SHEET NUMBER: E-6

REV.: 0

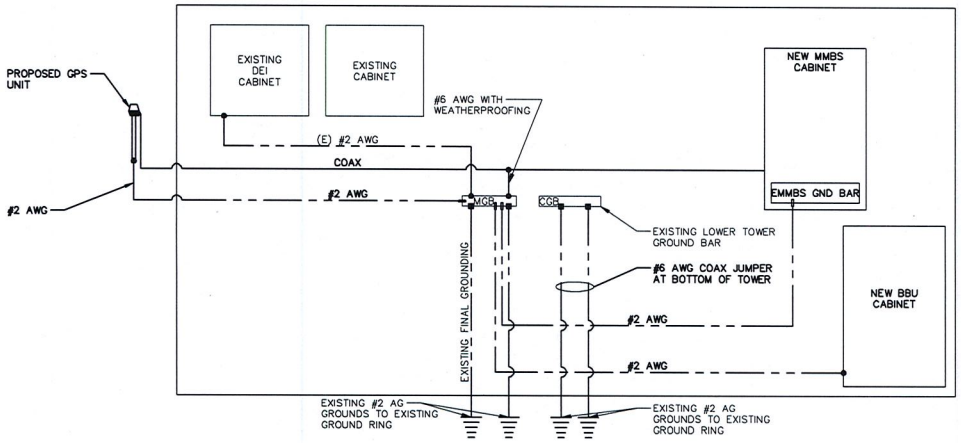

LEGEND	
■	EXOTHERMIC CONNECTION
●	MECHANICAL CONNECTION
CGB	COLLECTOR GROUND BAR
MGB	MASTER GROUND BAR

GROUNDING NOTES

1. ALL GROUNDING CONNECTIONS SHALL BE MADE BY EXOTHERMIC WELDS. EXOTHERMIC WELDS SHALL INCLUDE ALL CABLE TO CABLE, SPLICES, ETC. ALL CABLE TO GROUND RODS, GROUND RODS SPLICES AND LIGHTING PROTECTIONS SYSTEM AS INDICATED. GROUND FOUNDATION ONLY AS INDICATED BY PM. ALL MATERIALS USED (MOLDS, WELDING, METAL, TOOLS, ETC.) SHALL BE EXOTHERMIC WELDED AND INSTALLED PER MANUFACTURERS RECOMMENDATIONS AND PROCEDURES. GROUND CONDUCTOR SHALL HAVE A MINIMUM 24" BENDING RADIUS.
2. ALL EXOTHERMIC WELD CONNECTIONS ON GALVANIZED SURFACES SHALL BE CLEANED THOROUGHLY AND COLORED TO MATCH SURFACE WITH (2) TWO COATS OF GALVITE (WHITE) PAINT. OR SILVERBRITE (ALUMINUM).
3. ALL ELECTRICAL & MECHANICAL GROUND CONNECTIONS SHALL HAVE ANTIOXIDANT COMPOUND APPLIED TO CONNECTION.
4. GROUND TESTS SHALL BE PERFORMED AS REQUIRED BY SPRINT STANDARD PROCEDURES. GROUND GRID RESISTANCE SHALL NOT EXCEED 5-OHMS.
5. CONTRACTOR SHALL SUBMIT THE GROUND RESISTANCE TEXT REPORT AS FOLLOW:
   A. ONE (1) COPY TO OWNER REPRESENTATIVE
   B. ONE (1) COPY TO ENGINEER
   C. ONE (1) COPY TO KEEP INSIDE EQUIPMENT INCLOSURE
6. ALL RADIO EQUIPMENT AND UTILITY CABINETS GROUNDS LEADS TO BE #2 AWG STRANDED GREEN JACKETED FROM BUSS TERMINAL.
7. FOR ADDITIONAL GROUNDING NOTES SHEET E01.
8. ALL ANTENNA MOUNT GROUNDS SHALL BE #2 AWG STRANDED GREEN JACKETED CABLE GROUNDS SHALL BE BLACK FROM MFR.
9. ALL GROUND WIRES FROM GROUND BARS TO GROUND SHALL BE #2 AWG SOLID BARE AS REQUIRED.
10. ALL ABOVE GROUND WIRES SHALL BE GREEN JACKETED. ALL GROUND WIRE'S PENETRATING INTO GROUND AND BELOW SHALL BE SOLID BARE.

1 GROUNDING RISER DIAGRAM

CALE: NTS

Sprint®

SAMSUNG

REV.	DATE	REVISION DESCRIPTION	DRAWN BY	CHKD. BY
0	07-24-13	ISSUED FOR CONSTRUCTION	JAE	SEH
A	07-19-13	ISSUED FOR REVIEW	JAE	SEH

TeleCAD Wireless
1961 NORTHPOINT BLVD., SUITE 130
HIXSON, TN 37343
PH: 423-843-9500 FAX: 423-843-9509

I HEREBY CERTIFY THAT THIS PLAN, SPECIFICATION, OR REPORT WAS PREPARED BY ME OR UNDER MY DIRECT SUPERVISION AND THAT I AM A DULY LICENSED ARCHITECT UNDER THE LAWS OF THE STATE OF MINNESOTA

SIGNATURE

PRINT NAME: STEPHEN E HUNT

DATE: 7/24/13 LICENSE # 47489

PROJECT INFORMATION:

NETWORK VISION MMBS LAUNCH

DULUTH LESTER PARK

MS03NP157

1814 N 51ST AVE E
DULUTH, MN 55804
SANT LOUIS COUNTY

DRAWN BY:	CHECKED BY:	DATE:
JAE	SEH	07-19-13

SHEET TITLE: GROUNDING DETAILS

SHEET NUMBER: GR-1

REV.: 0

DETAIL NOT USED

1 TYP COAX GROUNDING

CALE: NTS

DETAIL NOT USED

2 CABLE GROUNDING

SCALE: NTS

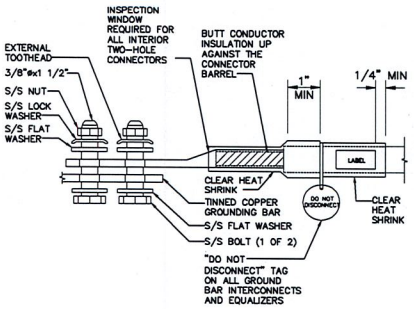

3 TWO HOLE LUG

SCALE: NTS

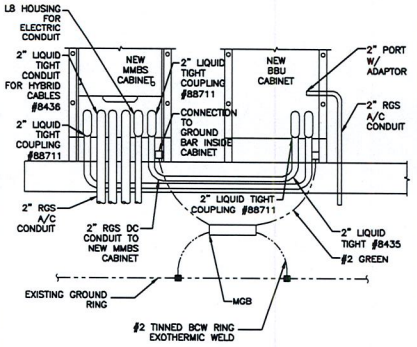

4 CABINET GROUNDING SCHEMATIC

SCALE: NTS

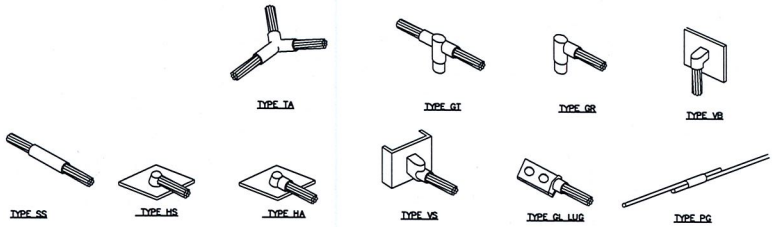

5 TYPICAL EXOTHERMIC WELD CONNECTIONS

CALE: NTS

DETAIL NOT USED

6 SECTOR GROUND BAR CONNECTIONS

SCALE: NTS

DETAIL NOT USED

7 TOWER MASTER GROUND BAR CONNECTIONS

CALE: NTS

Sprint®

SAMSUNG

REV.	DATE	REVISION DESCRIPTION	DRAWN BY	CHKD. BY
0	07-24-13	ISSUED FOR CONSTRUCTION	JAE	SEH
A	07-19-13	ISSUED FOR REVIEW	JAE	SEH

TeleCAD Wireless

1961 NORTHPOINT BLVD., SUITE 130
HIXSON, TN 37343
PH: 423-843-9500 FAX: 423-843-9509

I HEREBY CERTIFY THAT THIS PLAN, SPECIFICATION, OR REPORT WAS PREPARED BY ME OR UNDER MY DIRECT SUPERVISION AND THAT I AM A DULY LICENSED ARCHITECT UNDER THE LAWS OF THE STATE OF MINNESOTA

SIGNATURE: Stephen E. Hunt

PRINT NAME: STEPHEN E HUNT

DATE: 7/24/13 LICENSE # 47489

PROJECT INFORMATION:

NETWORK VISION MMBS LAUNCH

DULUTH LESTER PARK

MS03NP157

1814 N 51ST AVE E
DULUTH, MN 55804
SANT LOUIS COUNTY

DRAWN BY:	CHECKED BY:	DATE:
JAE	SEH	07-19-13

SHEET TITLE:

GROUNDING DETAILS

SHEET NUMBER: GR-2

REV.: 0