TRANSPORTATION

T-1 TYPICAL PARKING METER INSTALLATION
T-2 SIGN INSTALLATION DETAIL
T-3 STREET NAME SIGN FOOTING DETAIL
T-4 E-250 INSTALLATION
T-5 E-450 INSTALLATION
T-6 E-650 INSTALLATION

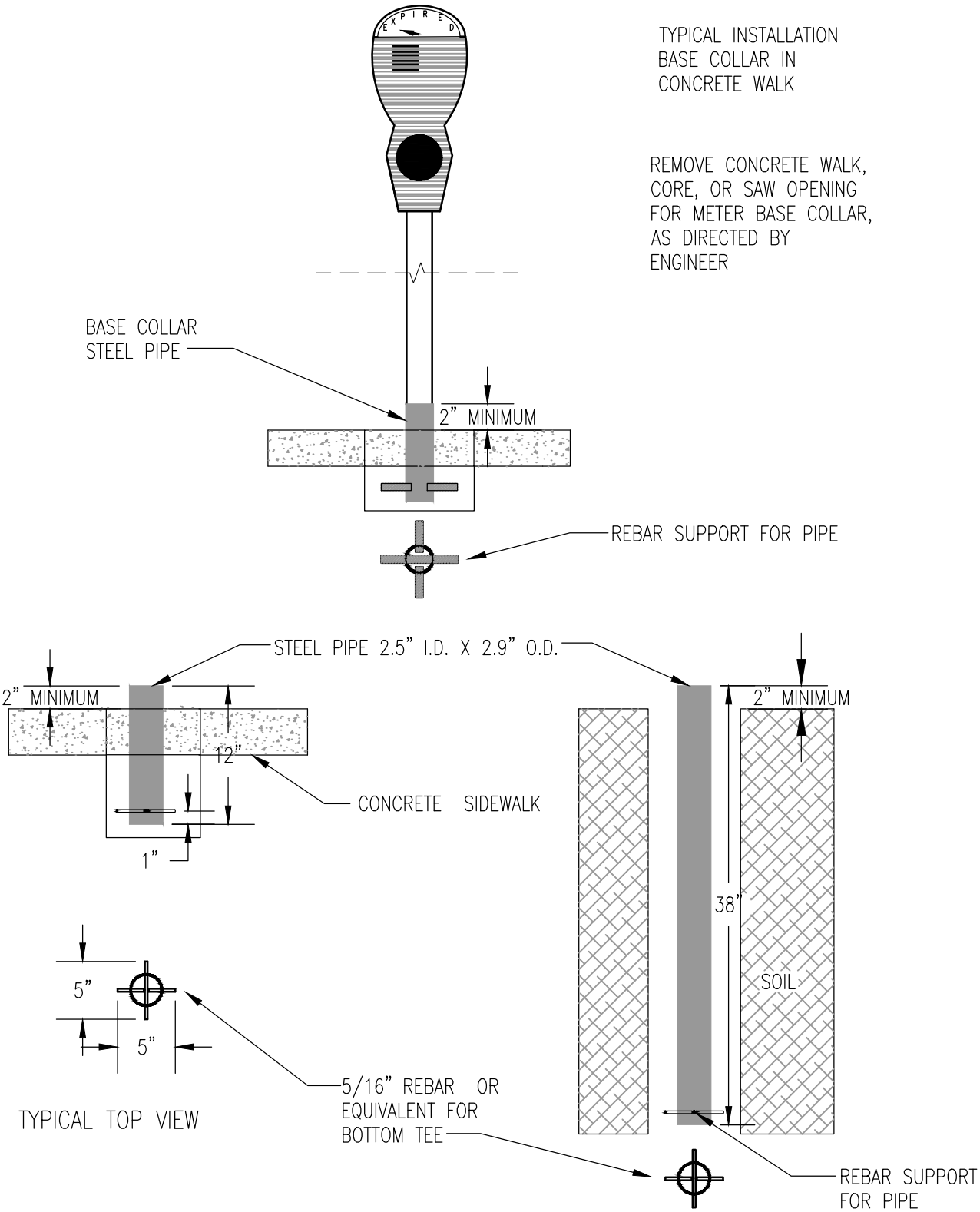

TYPICAL PARKING METER BASE COLLAR IN CONCRETE SIDEWALK

TYPICAL PARKING METER BASE COLLAR INSTALLATION IN SOIL

TYPICAL PARKING METER INSTALLATION		T–1
REVISED/APPROVED 2/01/2013	CITY OF DULUTH STANDARD DETAIL DEPT. OF PUBLIC WORKS AND UTILITIES	NO SCALE

NOTE: ALL DIMENSIONS ARE MINIMUMS.
A TWO PIECE POST MAY BE USED,
WITH 1.0' OVERLAP AND APPROVED
CONNECTOR.

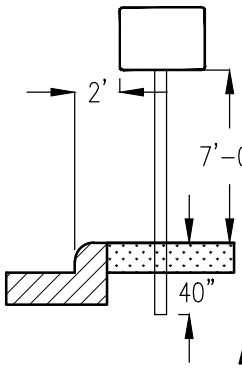

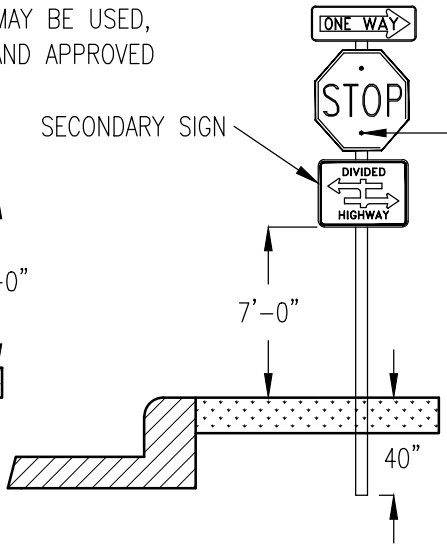

STAINLESS STEEL WASHER & NYLON WASHER (T=1/16" MIN., I.D.=3/8" MAX., O.D.=7/8" MAX.)

NOTE: SEE SPECIAL PROVISIONS FOR SIGN AND AND POST SPECIFICATIONS.

SIGN PANEL TO POST CONNECTION

ALL MATERIALS AND LABOR USED TO RELOCATE EXISTING SIGN AS SHOWN, SHALL BE INCLUDED IN THIS PAY ITEM:

SPEC. 2564.602, REMOVE AND REINSTALL SIGN, EACH

SIGN INSTALLATION DETAIL		T-2
REVISED/APPROVED 2/01/2013	CITY OF DULUTH STANDARD DETAIL DEPT. OF PUBLIC WORKS AND UTILITIES	NO SCALE

ALL MATERIALS AND LABOR USED TO CONSTRUCT SIGN BASE AS SHOWN, AND REMOVAL AND REPLACEMENT OF EXISTING SIGNS AND POLE IN NEW BASE, SHALL BE INCLUDED IN THIS PAY ITEM.

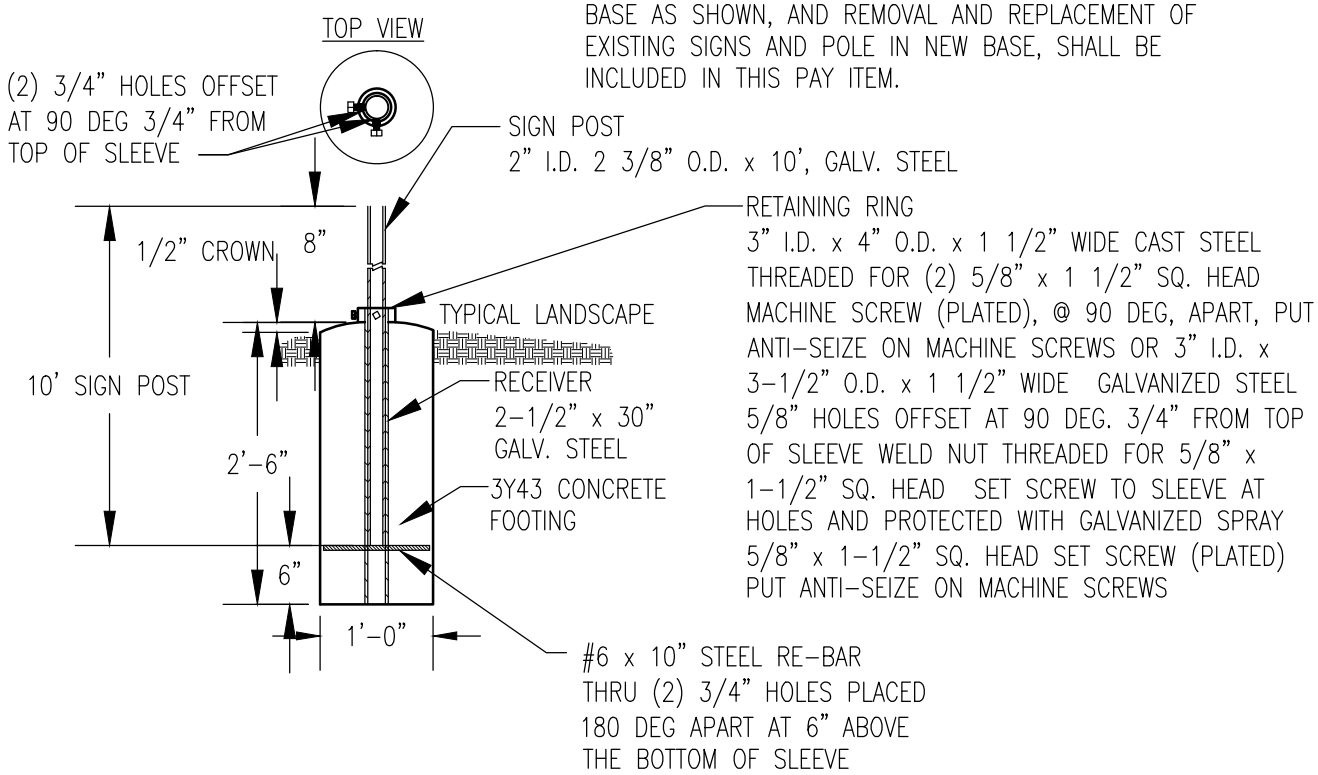

SPEC. 2564.602, REMOVE AND REINSTALL SIGN, EACH

STREET NAME SIGN FOOTING DETAIL		T-3
REVISED/APPROVED 2/01/2013	CITY OF DULUTH STANDARD DETAIL DEPT. OF PUBLIC WORKS AND UTILITIES	NO SCALE

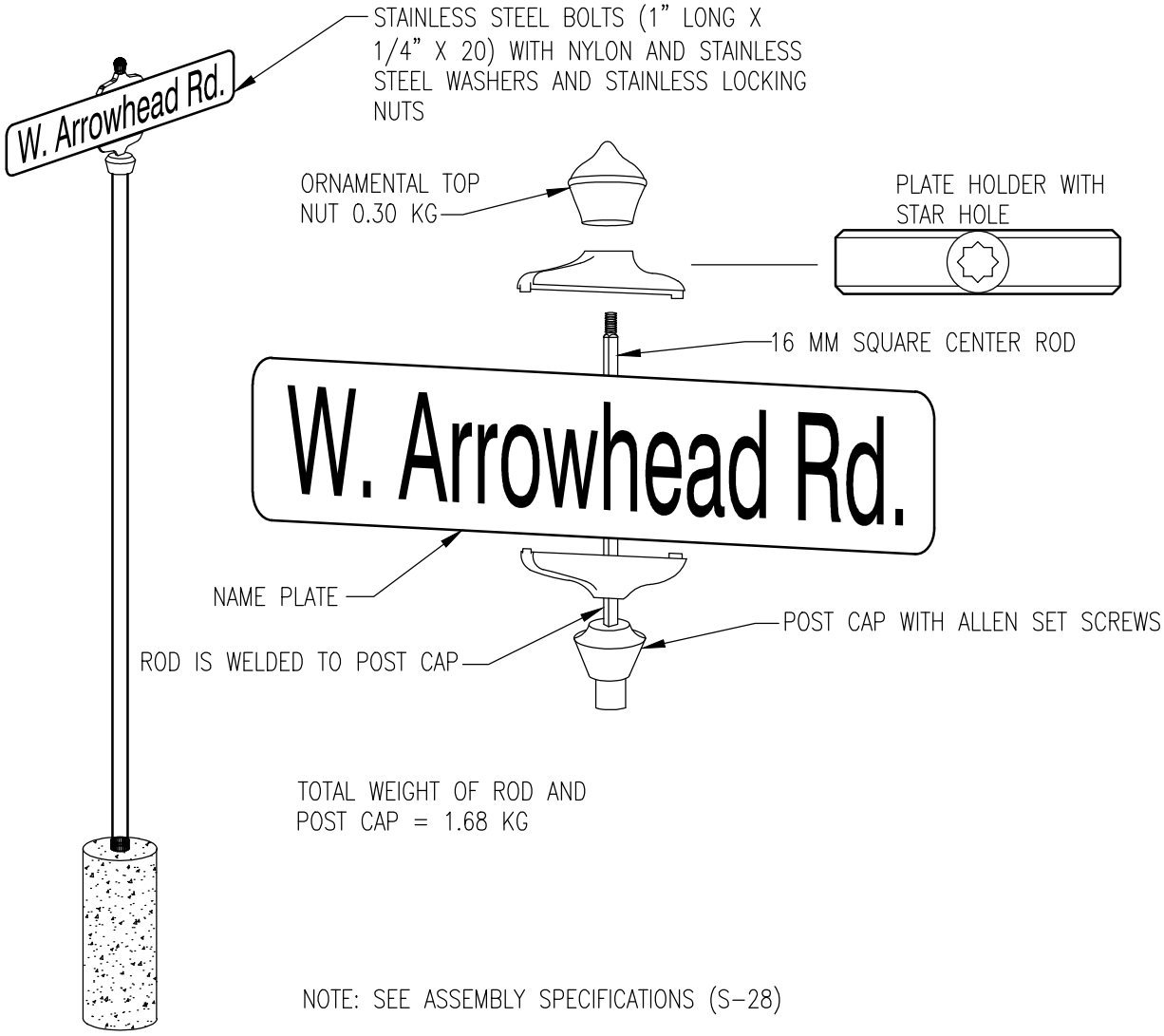

TOTAL WEIGHT OF ROD AND POST CAP = 1.68 KG

NOTE: SEE ASSEMBLY SPECIFICATIONS (S-28)

E-250 INSTALLATION		T-4
REVISED/APPROVED 2/01/2013	CITY OF DULUTH STANDARD DETAIL DEPT. OF PUBLIC WORKS AND UTILITIES	NO SCALE

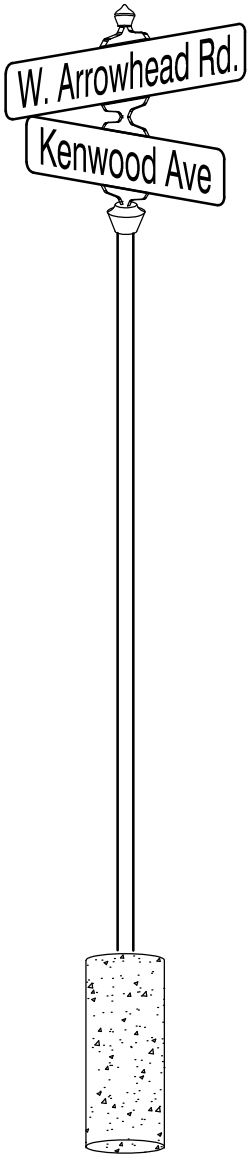

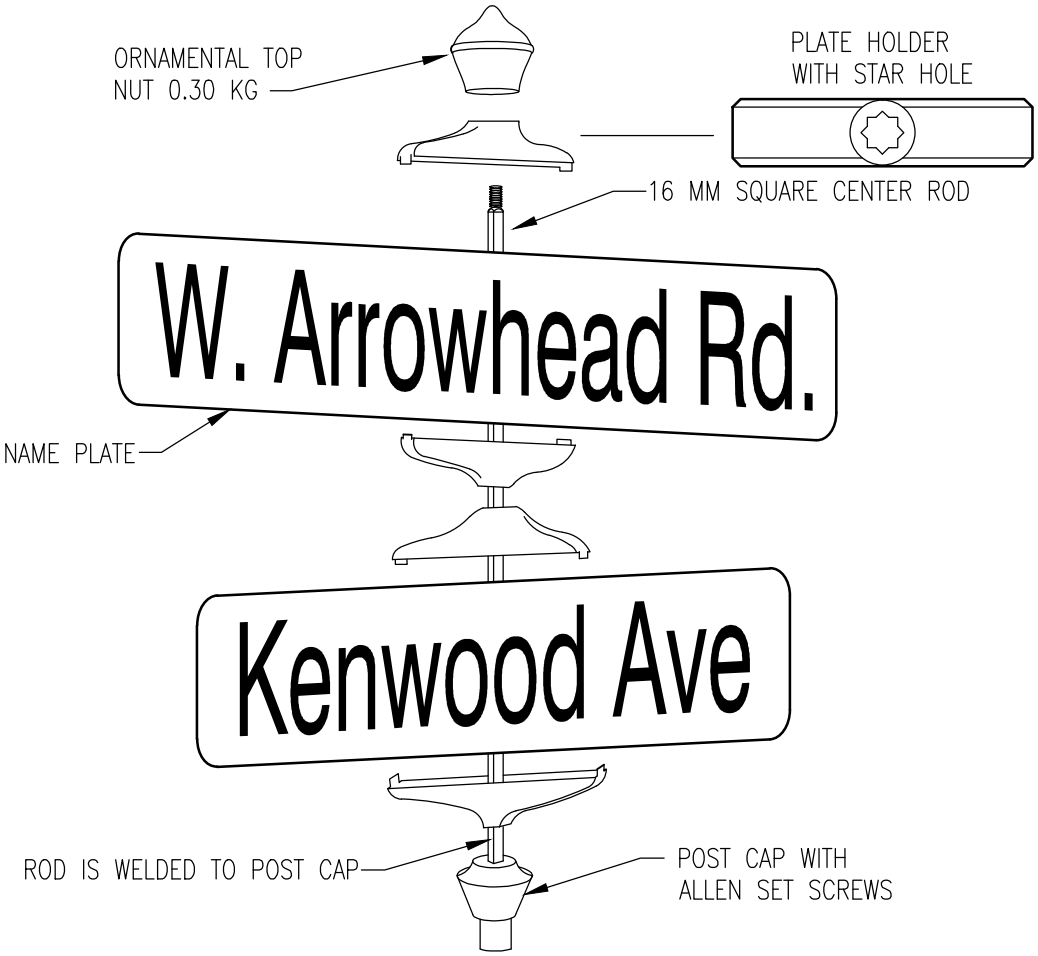

TOTAL WEIGHT OF ROD AND
POST CAP = 2.15 kg

NOTE: SEE ASSEMBLY SPECIFICATIONS (S–28)

E–450 INSTALLATION		T–5
REVISED/APPROVED 2/01/2013	CITY OF DULUTH STANDARD DETAIL DEPT. OF PUBLIC WORKS AND UTILITIES	NO SCALE

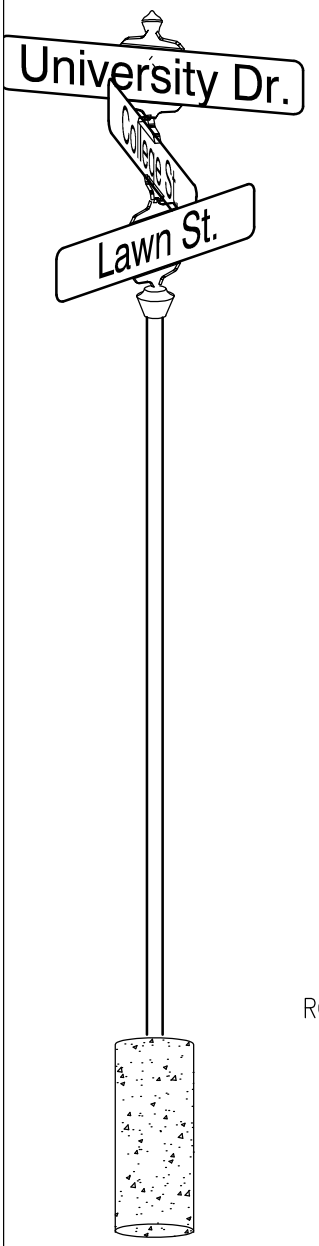

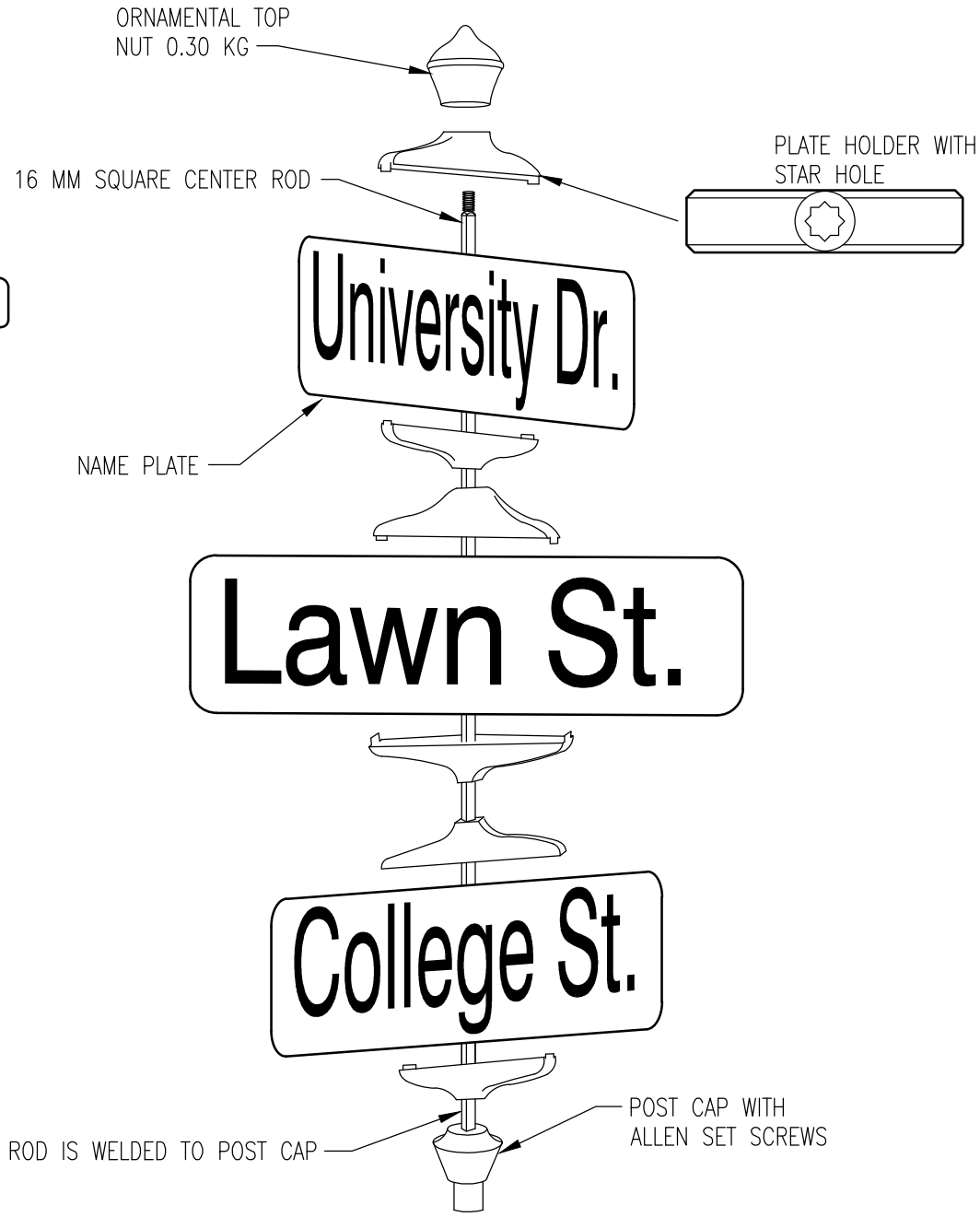

TOTAL WEIGHT OF ROD AND POST CAP = 2.74 KG

NOTE: SEE ASSEMBLY SPECIFICATIONS (S-28)

E-650 INSTALLATION		T-6
REVISED/APPROVED 2/01/2013	CITY OF DULUTH STANDARD DETAIL DEPT. OF PUBLIC WORKS AND UTILITIES	NO SCALE