City of Duluth, Minnesota

Public Works & Utilities Department - Engineering Division

2011 Edition

Standard Construction Specifications

APPENDIX A

2011 STANDARD SPECIFICATIONS FOR HIGH PRESSURE GAS MAINS, TRANSMISSION LINE AND SERVICE INSTALLATION, WELDING QUALIFICATIONS, AND QUALIFICATIONS FOR JOINING PE PIPE

Table of Contents

14.01 General 1

14.02 General Material Requirements 1

14.03 High Pressure Gas Pipe. 1

14.03.01 Steel Gas Main Pipe (2"-16") and Fittings 2
14.03.02 Polyethylene Pipe (1/2", 1", 2", 3") and Fittings. 3
14.03.03 Polyethylene Pipe (6"& 8") and Fittings 4

14.04 Valves 5

14.04.01 Steel Gate Valves. 5
14.04.02 Steel Ball Valves. 6
14.04.03 Polyethylene Valves. 7
14.04.04 Meter Stop Valves (3/4" and 1" sizes). 7
14.04.05 Plug Valves. 7
14.04.07 Meter Stop Valves for Multiple Meters. 7
14.04.08 Miscellaneous Transmission Valves. 8

14.05 Miscellaneous Fittings and Materials 8

14.05.01 Locating Wire. 8
14.05.02 Service Riser (3" and larger services). 8
14.05.03 Service Risers (1/2" CTS x 3/4" IPS and 1" CTS x 1" IPS and 2" IPS). 8
14.05.04 Transition Fittings (PE to Steel). 9
14.05.05 Valve Box. 9
14.05.06 Casing Seals. 9
14.05.07 Strainers. 9
14.05.08 Bolt-Type Couplings. 10
14.05.09 Steel Weld Flanges. 10
14.05.10 Gaskets. 10
14.05.11 Bolts. 10
14.05.12 Amp-Fit Couplings (no longer used). 11
14.05.13 Mechanical Plastic Pipe Coupling - (1/2" and 1"). 11
14.05.14 Electrofusion Plastic Pipe Coupling (1/2", 1", 2", 3", 6", 8"). 11
14.05.15 Service Tees for 3-inch & Smaller PE Services on Steel Mains 11
14.05.16 Expansion Joints. 12
14.05.17 Steel Extrube or Copper to P.E. Coupling - 5/8" OD. 12
14.05.18 Rock Shield. 13

14.06 Cathodic Protection Materials 13

14.06.01 Anodes. 13
14.06.02 Test Terminal Box. 13
14.06.03 Insulators 14
14.06.04 Field Coatings (Below Grade). See Section 25.06 for appropriate application. 14
14.06.05 Field Coatings (Above Grade). See Section 25.07 for appropriate application. 15

14.01 General

This section of the Standard Specifications establishes requirements and policies for the materials of construction of high pressure gas distribution systems operating at pressures ranging from 1 psig to 275 psig and a transmission line which operates at a pressure ranging from 550 psig to 974 psig. Low pressure gas mains and services, the remaining systems of which were abandoned in 1992, are only specified to the extent of involvement with high pressure construction, such as conflicts in location, abandonments, etc.

All excavation, backfilling and restoration and horizontal direction drilling required for the construction of high pressure gas distribution systems shall be performed in accordance with the City of Duluth, Minnesota Public Works & Utilities Department – Engineering Division, Standard Construction Specifications, most current edition.

For contracted projects, these specifications also establish responsibilities between the Contractor and the Department for supplying materials and providing labor and equipment for installations. The Plans and Special Provisions may change these responsibilities for particular projects; therefore, it is essential that those parts of the documents be carefully reviewed for each project, since they take precedence over this Standard Specification.

14.02 General Material Requirements

All materials required for this work shall be new material conforming to requirements of the referenced specifications for the class, kind, type, size, grade, and other details indicated in the Contract. Unless otherwise indicated, all required materials shall be furnished by the Contractor. If any options are provided for as to type, grade, or design of the material, the choice shall be limited as may be stipulated in the Plans, Proposal, or Special Provisions.

All manufactured products shall conform in detail to such standard design drawings as may be referenced or furnished in the Plans. Otherwise, the Department may require advance approval of material suppliers, product design, or other unspecified details as it deems desirable for maintaining adopted standards.

14.03 High Pressure Gas Pipe.

All pipe furnished for gas main and branch line installation shall be of the type, kind, size, and class indicated for each particular line segment as shown in the Plans and designated in the Contract Items.

Normal pressure range is 10 psig to 275 psig for distribution and 550 to 974 psig for transmission.

Minimum number of samples taken for acceptance/rejections testing by the Department will be based on the current Military Standard 105 D entitled SAMPLING PROCEDURES AND TABLES FOR INSPECTION BY ATTRIBUTES. The sampling plan consists of: General Inspection Level II, Single Sampling, Normal Inspection, and an Acceptable Quality level of 2.5; failure to pass this inspection is the minimum basis for rejection of lot. Rejected material shall be returned to supplier at supplier's expense.

Supplier shall certify with each shipment that the material shipped has been inspected by the supplier and conforms to the Material Specification.

14.03.01 Steel Gas Main Pipe (2"-16") and Fittings

Steel gas main pipe shall be class 1; grade B, X42, or X52; seamless, electric weld or submerged-arc weld steel pipe, conforming to the 42nd Edition of API Standard 5 L Specifications for Line Pipe and as specified herein.

Pipe shall be in double random lengths. Ends beveled 30°, +5°, -0° for butt weld joining.

Wall thickness shall conform to the following table unless specifically specified otherwise (see O&M Section 03.04(A) for other wall thicknesses):

Nominal Size Inches)	OD (Inches)	Least Nominal Wall Thickness (Inches)
2	2.375	0.154
3	3.500	0.154
4	4.500	0.188
6	6.625	0.188
8	8.625	0.188
10	10.750	0.219
12	12.750	0.250
16	16.000	0.250

Exterior pipe coating shall be factory applied thin film epoxy or fusion bonded epoxy (FBE). Thin film epoxy shall be from manufacturer's chart below. Thin film epoxy shall be applied according to the manufacturer's standards and recommendations, and conforming to the National Association of Pipe Coating Applicator's Specification 12-78-90. Coating thickness shall be 12 mils with a maximum tolerance of minus 2 mils.

Any pipe installed by directional drilling shall be coated with a sacrificial or abrasive top coat. The top coat is required to be minimum thickness of 0.020" (20 mils). Coating shall be factory applied unless approved by Engineer. This coating shall be from manufacturer's chart below.

Manufacturer	Base FBE	Abrasive Top Coat
Lilly Industries	2000	2040
3M Scotchkote	206N or 6233	6352
NapGuard	2500	2610
Power Lone Star		Powercrete

For field applied coatings and sleeve information see 14.06.04 & 14.06.05.

Exterior coating shall be cutback on pipe ends as follows:

For nominal sizes thru 12" - 1" cutbacks

Markings indicating the standard to which the pipe was manufactured shall be applied to the coated pipe.

Manufacturer, when requested, shall furnish ladle and check analysis of all heats used to make this pipe. For butt weld Class I pipe, supplier shall certify that the material furnished has been analyzed and meets the chemical requirements of API STD 5 L.

Steel Pipe for Gas Plumbing. Pipe 2" and less in diameter shall be black or galvanized, standard weight, Schedule 40, conforming to the requirements of ASTM A106 or A53, and manufactured by a domestic supplier.

14.03.02 Polyethylene Pipe (1/2", 1", 2", 3") and Fittings.

Polyethylene pipe shall be made from Phillips TR-418, "Gulf" HID 9300-T, Plexco P23BC resins (orange or yellow). Materials shall conform to ASTM 1248, Type II, Grade B, PE2306 or PE2406. Pipe and fittings shall conform to ASTM Specification D-2513 "Standard Specification for Thermoplastic Gas Pressure Pipe, Tubing, and Fittings."

Pipe weights and thicknesses shall be as follows:

Size	OD	SDR No.	Minimum Wall Thickness	Lbs/Ft
1/2" CTS	0.625"	7	0.090"	0.06
1" CTS	1.125"	11.5	0.099"	0.14
1" CTS	1.125"	9.3	0.121"	0.17
2" IPS	2.375"	11.0	0.216"	0.63
3" IPS	3.500"	11.5	0.304"	1.33

Pipe shall be marked as shown in the current ASTM D-2513 standard; and in addition, the resin manufacturer's material designation shall be marked on the pipe. If any data marked on the pipe is coded, the supplier shall furnish the code key. Pipe shall be new

or stored for a period of time that does not exceed the manufacturer's recommended maximum period of exposure, regardless of the method of storage.

Polyethylene fittings shall be the socket fusion type conforming to the current ASTM D-2683 Specification "Socket Polyethylene Fittings for SDR 11 Polyethylene Pipe, or Butt Fusion pipe conforming to the current ASTM D-3261 specification."
A mechanical type fitting may be substituted. This fitting shall be a "Continental Con-Stab Type 52,53 or 56" or a "lycofit by RW Lyle" for 1/2" and 1" diameter pipe, or 1/2" PE to steel or copper, Chicago fitting M785DCZ3S090 shall be permitted for temporary services.

An electrofusion type coupling or saddle fitting may be substituted upon approval of the Engineer. This fitting shall be electrofusion type by Central Plastics or Lycofuse.

Polyethylene service tee fittings shall be saddle fusion type or electrofusion type by Central Plastics or Lycofuse conforming to the current ASTM D-2513 standard.

Cutter punch size for 1" CTS service taps shall be 11/16" or larger.

Straight lengths of 2" or 3" pipe will only be permitted when specified or with approval of the Engineer, where it is determined to be most suitable for a particular installation.

Coiled pipe or tubing delivered to the work site shall have the ends capped.

Pipe Size	Minimum Coil ID	Maximum Coil OD	Maximum Coil Width
1/2"	30"	44"	6"
1"	44"	48"	12"
2"	48"	78"	41"
3"	70"	102"	44"

Pipe strapping shall be made of plastic or other non-metal material. Coils shall have strapping around the interior portions of the coil to prevent partial coils from collapsing, as well as a sufficient number of straps around the completed coil. Polyethylene pipe and fitting shall be Plexco, Continental or Phillips or approved equal.

14.03.03 Polyethylene Pipe (6"& 8") and Fittings

Polyethylene pipe shall be made from "Phillips TR-418" (orange or yellow), "Gulf HID 9300-T" (orange or yellow), or "Plexco P23BC" (orange or yellow) resins. Material shall conform to ASTM D1248, Type II, Grade B, PE2306 or PE2406. Pipe and fittings shall conform to ASTM Specification D-2513 "Standard Specification for Thermo-plastic Gas Pressure Pipe, Tubing and Fittings".

Pipe weights and thicknesses shall be as follows:

Size	OD	SDR No.	Minimum Wall Thickness	Lbs/Ft
6"	6.625±.011	11.5	0.581"	4.7
8"	8.625±.011	11.5	0.750"	7.99

Pipe shall be marked as shown in the current ASTM D-2513 standard, and, in addition, the resin manufacturer's material designation shall be marked on the pipe. If any data marked on the pipe is coded, the supplier shall furnish the code key. Pipe shall be new or stored for a period of time that does not exceed the manufacturer's recommended maximum period of exposure, regardless of the method of storage.

Polyethylene fittings shall be the butt fusion type conforming to the current ASTM D-3261 Specification "Butt Heat Fusion (PE) Plastic Fittings for (PE) Plastic Pipe and Fittings". Electrofusion fittings are an acceptable alternative.

Pipe shall be furnished in straight lengths. Length shall be in a minimum of 40 foot lengths. Straight lengths shall have plain ends without couplings unless otherwise specified.

Straight lengths of pipe shall be strapped with a sufficient number of non-metallic straps so the bundle will remain intact during shipping and warehousing.

Only with the Engineer's approval, pipe may be furnished by the contractor in coils. Contractor shall be responsible for the straightening of the pipe according to the manufacturer's instructions.

14.04 Valves

14.04.01 Steel Gate Valves.

Valve shall be a non-lubricating full port, steel body valve with a single disc which, when closing, results in a wedging action against the double seats, or compression of an elastomer against the seating area. Valve shall have a non-rising stainless steel stem, and the following features:

Pressure Rating:	275 WOG
Ends:	150# ANSI Flat Face Flanges (except when specified otherwise)
Operator:	2" Square and open Counter-clockwise
Coating:	"Scotchkote" #306 resin - 9 mils min.

Each valve shall have attached label indicating brand name or manufacturer, model number, pressure rating, and standard by which it was manufactured, such API #, MSS-SP#, ANSI#, etc.

Valve shall be Kerotest Model M-1, 1F2, or Kerotest Model EV-11, or approved equal.

When specified, locking devices (not including the lock) shall be provided by the valve manufacturer and shall consist of a two-part unit, a cap and a swivel nut which fits onto the stem and over the operating nut. Device shall be equal or similar to Kerotest's Model 1 Locking Device.

14.04.02 Steel Ball Valves.

A. Steel Valves – Trunnion Mounted Ball Valves. Valves shall be non-lubricating with emergency sealant ports, full port, double block and bleed, steel body, non-rising carbon steel nickel plated stem and the following features:

Pressure rating:	ANSI 150,300,600
Ends:	150#, 300#, 600# ANSI raised face flanges
Operator:	2"–4" valves to be lever operated except when specified otherwise (2" square operating nut) 6" and larger valves to be gear operated with hand wheel except when specified otherwise (2" operating nut)
Coating:	Below ground valves to be tar-set coated-30 mils thick.

Each valve shall have attached label indicating manufacturer, model & serial number, pressure rating and standard by which it was manufactured. Valves shall be Cooper Cameron type 41 or 31 or Grove B4-D, B-5 or approved by the engineer.

B. Steel Valves – Floating Ball Valves. Valves shall be non-lubricating, full port, steel body, non-rising stem and the following features:

Pressure rating:	ANSI 150#-Flat face flanges (except when specified otherwise)
Operator:	2"-4" to be lever operated with locking plate (open or close) 6" and larger to be gear box operated

Each valve shall have attached label indicating manufacturer, model number, pressure rating. Valve shall be Balon series "F" (Valve System, Inc., VSI 111 is no longer used).

14.04.03 Polyethylene Valves.

Valves shall be Nordstrom, Kerotest, Lyco by R. W. Lyle, Perfection Corporation, Broen (1-inch to 3-inch) or approved equal, with PE2406 (orange or yellow) polyethylene body, and 2-inch square operator conforming to the following requirements.

All valves shall be fully ported unless approved otherwise by the Chief Engineer of Utilities. Size 6-inch shall have a bore of at least 3.5" diameter. Size 8-inch shall have a bore of at least 4.75" diameter. Ends shall be sufficiently long to fit into fusion machines for butt fusion to SDR 11.5 (6-inch and 8-inch) pipe.

Sizes 1", 2" and 3" shall be ball type with ends for socket fusion to SDR 9.3 (1" CTS), SDR 11 (2" IPS) and SDR 11.5 (3" IPS) pipe. Connecting end shall be straight pipe not less than 3.25 or more than 6 inches long.

Each valve shall be clearly marked or labeled to show: the standard such as B16.40 to which it was manufactured; the manufacturer's name or trademark; the size; the pressure rating; SDR number and material standard, i.e. PE2306, 2406 of connecting end material.

14.04.04 Meter Stop Valves (3/4" and 1" sizes).

Meter stop valves shall be 175 psi, black iron body, brass or bronze key, stem nut and stem washer, tamperproof, lubricating type, lockwing with 1/2" hole. Inlet and outlet to have iron pipe inside threads. Outlet to have insulated union. Valves shall be one of or an approved equal to Eclipse PNP-203, McDonald 6276B, or Mueller E-11179.

14.04.05 Plug Valves.

Plug valves shall be rated for minimum WOG 175, with high strength cast iron body conforming to ASTM A 126-42, Class B. Valve shall have a lubricating fitting centered on top of the stem where lubricant will travel through the stem, a double ball check, and to sealant grooves to the well at the base of the plug.

Valves shall be short pattern with 125# ANSI flanges and have a 2-inch square operating nut. Valve shall be Walworth 1797F, Nordstrom 143, Homestead 602 or 612, or an approved equal.

14.04.07 Meter Stop Valves for Multiple Meters.

Meter stop valves shall be 175 psi, black iron body, brass or bronze key, stem nut and stem washer, tamperproof, lubricating type, lockwing with 1/2" hole. Inlet and outlet to have iron pipe inside threads. Valves shall be one of or an approved equal to Eclipse PNP-201, McDonald 560-B, Mueller H-11175, or Dresser Style 275.

14.04.08 Miscellaneous Transmission Valves.

These valves are located at the Pig Launch, Pig Receiver, and GL Regulator Station, 1/2", 3/4", and 1". The ball valves shall be either 3000# WOG black iron body type or 1000# WOG Stainless Steel, type CF8M/316, threaded end, full port, Kingdom Model KV-020.

14.05 Miscellaneous Fittings and Materials

14.05.01 Locating Wire.

Locating (tracer) wire shall be #12 solid copper with "HMWPE" 30 mil yellow insulation. Wire shall be supplied on spools of not less than 500 feet. If main and locate wire are to be placed by horizontal directionally drilling, tracer wire shall be #6 hard drawn copper (ASTM B-1) or annealed 49-strand braided 302 alloy stainless steel. The conductors shall be insulated with 45 mil yellow high-density polyethylene (HDPE) jacketing. The wire shall be tested in accordance with ASTM B-1 and D-1248 and spark tested at 7500 VAC. The breaking strength of the wire shall be at least 1280 pounds.

14.05.02 Service Riser (3" and larger services).

Riser shall be welded steel, length 30" vertical x 12" horizontal, 150# flange on top, coated up to flange per Specs., Sec. 14.13.07(E) and provisions made for anode attachment. Steel pipe shall be in conformance ASTM A106, ASTM 53, or API 5L, all Grade B.

14.05.03 Service Risers (1/2" CTS x 3/4" IPS and 1" CTS x 1" IPS and 2" IPS).

Riser shall be anodeless angle type with Phillips TR-418 plastic carrier pipe encased in a galvanized or a fusion bonded epoxy coated metal casing.

Vertical rise shall be 30 inches of which the top 15 inches shall be centered in the casing so that air or a heat resistant material occupies the space between. Carrier pipe to casing shall be sealed in the upper end by means of insert stiffener and compressed O-Rings or rubber seals. Horizontal leg shall be steel casing a minimum of 12 inches and a maximum of 20 inches plus a 12" pigtail of plastic pipe not encased. Below grade, end of casing shall be effectively sealed against water intrusion. The 2" anodeless riser may be installed in a 66 PSI system.

	1/2 CTS x 3/4 IPS	1" CTS x 1" IPS	2" IPS
Carrier Pipe Wall	0.090"	0.121"	0.216"
Top Connection	3/4" IP outside	1" IP outside	2" I.P. threads

Riser shall be one of or an approved equal to Perfection, Dresser, or R W Lyle and Company.

14.05.04 Transition Fittings (PE to Steel).

Transitions shall be resin coated Schedule 40 steel pipe connected to the polyethylene pipe with a factory-made permanent type compression joint meeting the requirements of ASTM D-2513 and ANSI B-31.8. Steel end shall be for weld type connection. Plastic portion shall conform to the minimum requirements for PE pipe as indicated below.

Size	Wall	Material	Type of Connection
1" CTS	SDR 9.3	Phillips or Gulf	Socket
2" IPS	SDR 11.0	Phillips or Gulf	Socket
3" IPS	SDR 11.5	Phillips or Gulf	Socket
6" IPS	SDR 11.5	Phillips or Gulf	Butt
8" IPS	SDR 11.5	Phillips or Gulf	Butt

14.05.05 Valve Box.

Box shall be two section, screw type with a cast iron top section and a plastic bottom section with a 5-1/4 inch ID, threaded shaft integral with a 9 inch diameter bonnet or bell. Heights of the sections shall be selected to fit the installation depth when the base is over the operating nut, but not closer than 2 inches to the valve flange. Plastic may be sawed off as required. Refer to Detail Drawing G-5 in the Appendix.

Cover shall be the stay-put type cast iron having 2 recessed lift holes. The identification "GAS" shall be cast into the cover.

14.05.06 Casing Seals.

For PE carrier pipe, casing seals shall be the pull-on "S" or "U" type made of oil and water resistant rubber, complete with stainless steel thumb screw clamps. Casing seals shall be P.S.I., Type S, F.H. Maloney Multiflex, T.D. Williamson U-Seal or approval equal.

For steel carrier pipe, casing seal shall be link seal type similar or equal to Link-Seal manufactured by Thunderline Corp., Wayne, MI.

14.05.07 Strainers.

Strainers shall be self-cleaning "Y" type, ductile iron or cast-steel body-125# ASA rating with screwed ends for up to 2 inch sizes and 150# ANSI flanged ends for sizes 2 inch and larger. Screen shall be monel or stainless steel wire, 30 mesh, with openings 1/50". Effective screen ratio shall be at least 2:1 or greater. Screen access cover shall be tapped FI PT for blowoff. Strainer for transmission is a 6" with 600# ANSI flanges and body, 100 mesh liner, simplex style. Strainer for the Stora Enso Flow Control regulator is an 8" 150# Ansi body, 100 mesh, simplex style (tee).

14.05.08 Bolt-Type Couplings.

Use was discontinued by or before 1993. Couplings no longer used on gas systems include Dresser Style 39-62, Style 38, Style 40, Style 711 and CS1 CLa Maxi-Grip.

14.05.09 Steel Weld Flanges.

Flanges shall be either welding neck or slip-on, flat face unless specified otherwise, 150# or 300# ANSI B16.5, and conforming to the ASTM Specification A181, except for transmission which are 600# ANSI, raised face.

14.05.10 Gaskets.

Gaskets for Flanged Connections shall be PSI Linebacker Sealing gasket with phenolic retainer and nitrile sealing element or non asbestos that are in stock (phasing out). Transmission line gaskets shall be 600# Flexitallic, PSI Linebacker Sealing gasket with G-10 retainer and Teflon or Viton sealing element or approved equal.

14.05.11 Bolts.

Bolts for flanged connections shall be ASTM449 medium carbon steel, SAE Grade 5, medium carbon quenched-tempered and the head marked with a "Y" to indicate grade. B7 stud is an acceptable alternative when bolts do not fit the application. Bolts for transmissions will be ASTM A193 B7 grade, 600# ANSI.

BOLTS FOR FLANGED CONNECTIONS (150# CLASS)

Size	No of Bolts Per Flange	Diameter of Bolts*	Bolt Length*	Stud Length	ID and OD Inches	Suggested Torque Ft-Lbs **
2"	4	5/8"	2-1/4"	3-1/2"	2" x 4-1/8"	80
3"	4	5/8"	2-1/2"	3-3/4"	3" x 5-3/8"	110
4"	8	5/8"	2-3/4"	3-3/4"	4" x 6-7/8"	100
6"	8	3/4"	3-1/4"	4-1/4"	6" x 8-3/4"	130
8"	8	3/4"	3-1/2"	4-1/2"	8" x 11"	130
10"	12	7/8"	3-3/4"	5-0"	10" x 13-3/8"	215
12"	12	7/8"	3-3/4"	5-0"	12" x 16-1/8"	220
16"	16	1"	4-1/2"	5-7/8"	16" x 20-1/4"	320

* Use bolts or studs ½" longer with insulating flanges. No stud or bolt shall have less than two (2) exposed threads on the nut end.
**Torque is based on lubricated bolt and bolt stress of 45 ksi.

On Transmission system, Engineering must be contacted prior to work for approval of diameters, length, number, and recommended torque.

14.05.12 Amp-Fit Couplings (no longer used).

Amp-Fit Transition Couplings (1/2" CTS PE to 5/8" OD Copper). Fitting was designed to connect 1/2" CTS - .09" wall polyethylene to 5/8" OD - Type K Copper. Fitting was Amp-Fit Part No. 332643-1.

Amp-Fit Repair Coupling (1" CTS, 1" CTS, 2" IPS - PE to PE). Fitting was designed to connect the following polyethylene pipe sizes:

1/2" CTS PE - .09" wall - SDR 7 - Part No. 332629-2
1" CTS PE - .121" wall - SDR 9.3 - Part No. 561414-1
2" IPS PE - .216" wall - SDR 11 - Part No. 561124-2

14.05.13 Mechanical Plastic Pipe Coupling - (1/2" and 1").

Coupling shall have a plastic body with plastic end sleeves designed to compress the pipe over plastic barbed ends with a metal stiffener that extend the length of the coupling or couplings shall have a plastic body with two internal seals, a fixed stiffener, self-locking gripper and a moisture lip. Couplings shall be tested to conform to ASTM D2513. Coupling shall be labeled to indicate a pipe size and wall thickness as follows:

1/2" CTS - 0.09" Wall - SDR 7
1" CTS - 0.121" Wall - SDR 9.3

Coupling shall be "Lycofit" by RWL Pipeline Products, "Con-Stab Type 52, 53 or 56" by Continental Industries or approved equal.

14.05.14 Electrofusion Plastic Pipe Coupling (1/2", 1", 2", 3", 6", 8").

Couplings shall be compatible with an approved electrofusion unit. Electrofuse coupling shall be Lycofuse or Central Plastics designed to connect all PE 2306 or 2406 (orange or yellow or tan) medium density plastic pipe of the following sizes:

1/2" CTS PE pipe
1" CTS PE pipe
2" IPS PE pipe
3" IPS PE pipe
6" IPS PE pipe
8" IPS PE pipe

14.05.15 Service Tees for 3-inch & Smaller PE Services on Steel Mains

Service tee shall be steel, designed for at least 100 psi working pressure with a weld-on inlet end, incorporate an internally-contained tap, and have an outlet designed to connect polyethylene pipe, PE2306 or PE2406. The connection to the polyethylene

pipe shall be designed so that the pullout resistance exceeds the strength of the pipe in accordance with D.O.T. Pipeline Safety Regulations, Part 192.283(b). An insert stiffener shall be attached to each compression end.

Service Tee for 1/2-inch and 1-inch services shall be equal or similar to the table below:

Compression Outlet	Weld Inlet	Tap Size	Model
½" CTS PE, 0.090" Wall	3/4-inch	3/8-inch	Mueller 18702 Mueller 18104
½" CTS PE, 0.090" Wall *	1/2-inch	3/8-inch	Mueller 18198 Mueller 18104
1" CTS PE, 0.121" Wall	3/4-inch	1/2-inch	Dresser 501 Mueller 18104

* For connection on steel mains sizes 2-inch and smaller.

Service Tee for 2-inch and 3-inch services shall be equal or similar to the table below:

Weld Outlet	Weld Inlet	Tap Size	Model
2-inch	2-inch	1-1/2 inch	Mueller H-17650

14.05.16 Expansion Joints

Expansion Joint-Bellows Type. Joint used for special application, for pipelines unrestricted by surrounding earth, and where expansion/contraction exceeds limits of the Bolt Type Joint. Must not be direct buried.

Bellows type shall be stainless steel expansion, with pressure rating of not less than 50 psi, with weld ends.

Joints shall be similar or equal to "Flexonics" Free-Flexing Expansion Joint standard low pressure unit or a Badger Standard Service Rated Type W.

14.05.17 Steel Extrube or Copper to P.E. Coupling - 5/8" OD.

Coupling shall be designed to connect either 5/8" OD steel or copper tube to 1/2" (5/8" OD) - 0.090" wall or SDR7 polyethylene tube. Coupling shall be brass or bronze and have a built-in stiffener in one end. The connecting ends must be designed so that the P.E. pipe will fail before the pipes could be pulled out of either end of fitting.

Markings on coupling shall show manufacturer, OD of connecting pipes, and wall thickness for P.E. connection.

Coupling shall be Chicago fitting, Part No. M785DC23S090 or approved equal.

14.05.18 Rock Shield.

Rock shield will be three eighths (3/8") inches thick and double wrapped around pipe. "Tuff N Nuff" or approved equal.

14.06 Cathodic Protection Materials

14.06.01 Anodes.

Anodes for gas main and structure protection shall be the packaged type consisting of a cast magnesium anode having a silver soldered #12 TW lead wire at least 10 feet long attached to a steel core. Anode shall be encased with cloth bag containing a prepared backfill mixture of: hydrated gypsum, bentonite, and sodium sulphate. Weight of magnesium anode shall be as specified.

Anodes, when specified to protect service risers or isolated fittings, shall be magnesium weighing at least one pound with at least 5 feet copper THNN wire. Anode shall be effectively attached to the protected material with a stainless steel base clamp.

Anodes shall be similar or equal to Galvomag by Harco or Maxmag by Federal Metals.

14.06.02 Test Terminal Box.

Grade mounted box for use in nonpaved locations shall be ABS or PVC plastic, at least 17 inches long with slight flare at the base. Inside diameter shall be at least 2-3/8 inches. Cap shall be of the same material as the box with a rim which extends over the top of the box to prevent entry of foreign materials. Cap shall lock by a wedging action when the center steel bolt is turned. Bolt shall be magnetic for easy locating. Attached to the inside of cap shall be a 5 bolt terminal block which will bring the wires out of the box with the cap. Cap shall be impressed with the letters "TEST STATION". Box shall be "Handley Industries" Model TP-5B, "Flush Fink" by Cott Industries, or an approved equal.

Free standing test stations/markers shall be "Carsonite Perma-Post" test stations or an approved equal.

Pole mounted test stations shall be Crouse-Hines condulet E-27 with 3/4" threaded outlet attached to a minimum 24 inches of 3/4" galvanized conduit with plastic end protector.

Face plate shall be Crouse-Hines No. 2770, terminal plate supplied with No. E type of terminal connection as specified. The grade mounted, pole mounted, and free standing

test stations to be supplied by Public Works & Utilities Department, Utility Operations, 520 Garfield Avenue, unless otherwise specified.

14.06.03 Insulators

Flange insulators for ANSI 150# through 300# full face flanges shall be phenolic retainers with nitrile sealing elements, complete with full length Mylar sleeves and glass clad phenolic washers for insulating bolts on one side of flange. Flange insulators for ANSI 600# full face flanges shall be G-10 retainers with Teflon or Viton sealing elements, complete with full length G-10 sleeves and G-10 washers for insulating bolts on one side of flange. Gasket shall be Type E faced, 1/8 inch thick, for ANSI 150# through 600# full face flanges, as manufactured by Pipe Seal and Insulator Company (PSI), Central Plastics Company, or an approved equal.

Casing insulators shall be two or more segments of molded polyethylene bolted together so the segments fit tightly around the carrier pipe. Insulator shall be "Pipeline Seal and Insulator" Model PE, F H Mahoney Pipeline Products, Model 60, or T D Williamson, Inc., Model N-2, or approved equal.

Pipe support insulators shall be molded fiberglass shaped to conform to fit over specified pipe sizes, one or two pieces as specified, complete with epoxy seam sealer which fills all voids between pipe and insulator. Pipe support insulators shall be similar or equal to "Glas Mesh Type 180, Type 240, or Type 220/240.

Pipeline insulators for electrically isolating sections of steel gas lines shall be one piece weld end spools, fabricated with API 5L Grade B Steel, rated for ANSI 150# or 300#, coated internally and externally with epoxy resin coating except for weld end cutbacks. Dielectric materials shall be compatible with natural gas.

Size (OD)	Wall Thickness	Size (OD)	Minimum Wall Thickness
4.500"	0.188"	10.75"	0.219"
6.625"	0.188"	12.75"	0.250"
8.625"	0.188"	16.00"	0.250"

Pipeline insulators shall be "IsoJoint" by Advance Products & Systems, Inc.; "PSI Electro-Stop Isolators" by Pipeline Seal & Insulator Inc.; Kerotest "Zunt" Type 1-A, or pre-approved equal.

14.06.04 Field Coatings (Below Grade). See Section 25.06 for appropriate application.

A. Cold Type Applications. Cold applied coatings shall be one of the following approved commercial types or approved equals:

- Polyken 930-35 mill tape with #927 brush primer or #935 spray primer

- Tapecoat H-35G mill tape.
- Scotchkote Corrosion Protection Tape #50 with Scotchrap pipe primer.
- Royston Greenline Tape with 747 Primer
- T C Mastic
- Wax Tape by Trenton Corporation or approved equal for irregular fittings.
- Fusion bonded epoxy only by Engineering approval.

B. Hot Type Applications. Hot applied coatings shall be one of the following tape-prime combinations or approved equal:

- Tapecoat 20 with T C Omniprime.
- Thermofit (shrink) pipe sleeves by Raychem (Ultratec Division) or T C Omniprime

C. Directional boring pipe (shrink) sleeves shall be Dirax (by Raychem)

14.06.05 Field Coatings (Above Grade). See Section 25.07 for appropriate application.

A. Rust-O-Leum Primer #678 or 769, Rustex, Derusto, shall be used when specified in Section 15.08(F). Color shall be gray unless otherwise specified.

B. Polyamide epoxy, high build, two part, one coat, similar or equal to Pittsburgh "Pit Guard" DTR or Rust-O-Leum High Performance Epoxy 9100V shall be used when specified. Color shall be gray unless otherwise specified.

C. Acrylic Urethane enamel with a compatible primer similar or equal to Pitthane Acrylic Urethane enamel with Medalhide 1001 inorganic zinc rich primer, or Aquapon Polymide-epoxy organic primer shall be used when specified. Color shall be gray unless otherwise specified. An approved equal is Devthane 379 Top Coat with Devoe Bar Rust 235. Primer shall be Devoe.

D. Tape coating, when specified for above grade applications, shall be similar or equal to Tapecoat H35 grey. Tapecoat H50 grey shall be used where abrasion from street grit is evident. System shall be resistant to ultraviolet light, shrinkage, ambient temperature changes.

Wax Tape by Raychem (Ultatec Divison) or Polymide epoxy, (see 2 above) in color white, shall be applied to irregular fittings when tape coating is not practical.

Table of Contents

15.01 General 1

15.02 Excavation and Backfill Standards 1

15.03 Clearance Requirements 1

15.04 Alignments for mains 3

15.05 Grade for mains and services 3

15.06 Backfill for trenches 3

15.07 Certification of Welders and Fusers. 4

15.08 Load Considerations. 4

15.09 Installation of Protective Barriers. 4

15.10 Casing Requirements 5

15.01 General

This section of the Standard Specifications establishes requirements and policies for the installation of high pressure gas distribution systems operating at pressures ranging from 1 psig to 275 psig and a transmission line which operates at a pressure ranging from 550 psig to 974 psig. Low pressure gas mains and services, the remaining systems of which were abandoned in 1992, are only specified to the extent of involvement with high pressure construction, such as conflicts in location, abandonments, etc.

All excavation, backfilling and restoration and horizontal direction drilling required for the construction of high pressure gas distribution systems shall be performed in accordance with the City of Duluth, Minnesota Public Works & Utilities Department – Engineering Division, Standard Construction Specifications, most current edition.

For contracted projects, these specifications also establish responsibilities between the Contractor and the Department for providing labor and equipment for installations. The Plans and Special Provisions may change these responsibilities for particular projects; therefore, it is essential that those parts of the documents be carefully reviewed for each project, since they take precedence over this Standard Specification.

15.02 Excavation and Backfill Standards

Requirements for site clearing, excavation, preparing trench, backfilling and restoration are contained in the Standard Specification, Section 14 and shall govern the execution of work where they are not in conflict with more specific requirements contained in the Plans, the Special Provisions, or in this section.

15.03 Clearance Requirements

A. Clearance requirements between underground gas mains and non-associated mains, utilities, structures, or rock shall be maintained at least as follows:

General Clearance -	6" - for rock, non-metallic pipe, structures, etc.
Special Clearances -	12" - for metallic pipe, structures, electrical conductor wires, etc
	30" - between plastic gas pipe and steam lines

Where these clearances cannot be maintained, the Contractor shall notify the Engineer, who will determine the method or materials required to protect the gas main.

B. Required Procedures to Maintain Clearances When Moling or Horizontal Directional Drilling across Sewers

1. Sanitary Main

Remove nearest manhole lid and measure depth to sewer. If the proposed crossing is within 50' to manhole, then inspection of only one manhole is adequate; If the manhole is further than 50 feet away, the manhole at the other end shall also be inspected.

If sewer is greater than 7' deep, no additional precautions are necessary.

If sewer is between 4.5' to 7' deep, keep track of mole or drill distance and reject if exit depth is more than 4'. After crossing sewer, call Engineering Division for scheduling video inspection.

If sewer is less than 4.5' deep, excavate in street over sewer and mole or drill each way.

2. Storm Main or Inlet Lead

Remove manhole lids and determine depth to sewer.

If 4' to 5' deep to top of sewer pipe, keep track of mole distance and its rate of travel as it crosses sewer or depth of drill rod. Also listen at manhole or inlet. Visually check inside pipe to insure no damage. Reject crossing if exit depth is more than 4'.

If less than 4' deep to top of sewer pipe, excavate at pipe and mole or drill each way either over or under whichever is suitable for the situation.

The six-inch general clearance requirement in the Standard Specifications is intended to apply when the clearance can be verified. When making judgment for short shots, where sewer is 10' or less from mole launch hole, at least 12 inches of clearance should be aimed for.

3. Sanitary Sewer Services

Remove manhole lids and measure depths at each end of sewer.

Where main sewer is more than 8' deep and terrain to house is flat (also no raised basements) no special precautions are necessary. If terrain rises to house or basement is raised, then excavate over service and mole or drill either way. Contact Engineering office to determine sewer wye location.

Where main sewer is less than 8', locate and excavate over service and mole or drill each way.

Where sewer service lies under stairs, walk or paved driveway, bushes or other obstruction, special judgment will be exercised by the inspector to determine if digging is necessary or other means are reasonable to lessen risk of conflict.

15.04 Alignments for mains

Alignments for mains shall be as indicated on the Plans. The Department will establish exact alignment prior to construction, and reserves the right to make minor changes as work progresses at no additional compensation. Major changes may be considered for extra payment only to the extent where: They are major deviations from Plan alignment; the Contractor informs the Department and obtains a written understanding for the basis of payment for extra work prior to construction of that portion. Fittings necessary to fit the Plan, whether indicated on the Plan or not, shall be considered incidental to the pipeline.

15.05 Grade for mains and services

Grade shall be established by the depth of cover, except where indicated on the Plans or specifically established by the Engineer.

Table 15-1
Minimum and Maximum Depth of Cover

Type	Minimum Cover (inches)	Maximum Cover (inches)
Transmission Main	48	72
Main – general	36	48
Main – rock trench	24	48
Service – less than 2"	18	48
Service – 2" and larger	36	48
Service – under driving surface	36	48
Service – rock trench	12	48

When these depths cannot be maintained, the Contractor shall notify the Engineer, who will determine the method or material required to protect the main.

15.06 Backfill for trenches

All excavation, backfilling and restoration and horizontal direction drilling required for the construction of high pressure gas distribution systems shall be performed in accordance with the City of Duluth, Minnesota Public Works & Utilities Department –

Engineering Division, Standard Construction Specifications, most current edition and any supplements or addenda.

For gas mains and services installed under the following conditions:

A. Under a driving surface, including graveled shoulders, driveway, parking lots
B. Under a sidewalk
C. To provide a base for undercut foreign utilities, curbs, walks, etc.

Class 5 granular material conforming to MnDOT 31328 shall be used.

15.07 Certification of Welders and Fusers

All pipeline welding shall be done by qualified Welders in accordance with Section 27 of these Standards.

All pipeline fusing shall be done by qualified fusers in accordance with Section 28 of these Standards.

15.08 Load Considerations

Special protection shall be provided to avoid direct extraordinary loads or external forces on the pipe. The Engineer will determine if and what kind of special protection shall be provided. A pipeline must be designed and installed so that each joint will sustain longitudinal pullout or thrust forces caused by the contraction or the expansion of the piping or by anticipated external and internal loading.

15.09 Installation of Protective Barriers

The Department or Contractor, when specified, shall install protective barriers to protect gas pipeline facilities from traffic or other hazards.

Gas mains above grade, or service risers, regulators, or meter sets, when exposed to potential traffic hazards in an alley, street or parking lot, shall be protected with one of the following:

A. Welded pipe barrier lagged to the building and painted in safety yellow.
B. Steel pipes set in the ground, or set in concrete bases. This barrier must only be used where traffic speed is less than 10 mph, unless pipes are less than 4" in diameter or are set in ground but not concrete. Pipes shall be painted in safety yellow.
C. Welded channels, angle iron, or plates lagged to the building.
D. Cages constructed from angle iron and expanded metal screening. Paint may be green or yellow, depending on exposure.
E. Guard rails meeting MNDOT standards.

District Regulator Stations shall be protected according to Detail Drawing G-30 in the Appendix. Additional traffic protection, when deemed necessary by the Engineer, shall consist of guard rails meeting MNDOT Standards or other special protection specified in a plan.

15.10 Casing Requirements

Casings which will contain a gas main or service shall be installed subject to the following requirements:

A. The type of material, weight or thickness, grade shall be sufficient to withstand trench load and anticipated live loads, including impact.

B. Casings which will contain steel gas pipes shall have approved end seals that electrically insulate casing from gas pipe and provide a water-tight seal to prevent groundwater from entering the casing annulus.

C. Casings which contain plastic gas pipes shall have special protection such as injected sealant foam or other material where plastic pipe exits the casing to prevent earth backfill load from pressing plastic against the casing. Also, 2" and larger plastic mains shall be provided with anchorage where main exits a casing.

D. One or two vents shall be installed on each casing installed under highways, railroads, buildings and runways or taxiways. Vents must terminate in a manner which prevents rain or surface waters from entering the casing. Vents are not required on wall sleeves or short casings used for special (shallow main) protection. Vent to outdoors is required if casing runs through a habitable enclosed space.

E. Approved casing insulators must be installed when a steel gas line runs through a steel casing.

F. For plastic gas pipe installed in casings within the 5-foot frost zone, the casings must not exceed the size permitted in 15.06.

Table of Contents

16.01 General 1

16.02 Handling of Pipe and Fittings 1

16.03 Inspection of Pipe and Fittings 1

16.04 Cleaning Pipe Interior 2

16.05 Steel Pipe Installation 2

16.06 Repair of Damaged Steel Pipe (192.307) 3

16.06.01 Transmission Main 3
16.06.02 Distribution 3

16.07 Joining Pipe and Fittings 5

16.07.01 General 5
16.07.02 Welded Joints 5
16.07.03 Flanged Connections 8
16.07.04 Steel (Extrube) to PE Repair Coupling, 5/8" ST to 1/2" PE Installation.....8

16.08 Branch Main Connections, 2" and Larger 9

16.08.01 Connections to mains not in service 9
16.08.02 Connections to mains in service 9
16.08.03 Branch Connection Policy To Steel Mains In Service 10

16.09 Hot Taps on Gas Main - Procedures, Training and Qualifications 10

Table 16-1: Steel to Steel Joints 5

Table 16-2: Plastic Pipe to Steel Pipe or Copper Risers 5

Table 16-3: Hot Taps, Tool, Instructions, Qualification 11

16.01 General

This section of the Standard Specifications establishes requirements and policies for the installation of steel gas distribution systems and a transmission line.

16.02 Handling of Pipe and Fittings

The Contractor shall have adequate equipment on the site for unloading, supporting, and lowering pipe and fittings into trench. Pipe shall not be rolled, dragged, dropped, or allowed to contact sharp or hard objects which could cause injury to the pipe or coating. Fabric slings or soft padded devices shall be used so as to protect the pipe or coating. Pipe and fitting should be adequately secured to limit movement during transporting. Pipe stored outside shall have ends capped to prevent entry of water or debris, except when it is possible to visually determine that the pipe is clean before installation.

16.03 Inspection of Pipe and Fittings

Before installation, all fittings, lengths, and sections of pipe shall be thoroughly cleaned inside and inspected for defects. Steel pipe shall be inspected for damaged ends, coating defects, and other abnormalities (192.461) (b).

Upon completion of the welds, they shall be visually inspected to insure compliance with the qualifying weld procedure.

Steel pipeline sections, after being welded and the joints coated, shall be electrically inspected by the Contractor in the Inspector's presence immediately before lowering the pipeline section into the trench. Each section of pipe must also be protected from damage resulting from adverse ditch conditions or damage from supporting blocks. Holiday inspection shall be performed on all pipe and fittings with an electronic holiday detector, supplied by the Contractor, and operated in such a manner as to audibly and visually detect the presence of all holidays. The inspection shall be performed as outlined in the latest revision of NACE Standard RP 0490-2001 with a certified holiday detector. This inspection shall occur on all buried piping. This shall be done by use of a "geeper" which detects coating defects. Coatings found defective shall be immediately repaired and geeped again. Correct geeper voltage (1800 volts for 12-mil 3M Coating) shall be verified with the inspector for the particular pipe coating before starting operation. Salvaged pipe to be reinstalled, which has wrapped bitumastic coating, shall have geeper voltage set at 7200 V for 3/32" and 9600 V for 1/8" coating thickness. If a jeep voltage is not specified by the manufacturer then the holiday detection voltage shall be determined by $V= 525\sqrt{T}$, where T = coating film thickness in mils. Proper voltage settings shall be confirmed by detecting three artificial holidays placed in the initial pipe joint. For fabrication inspection, the electrode shall be a wet sponge detector supplied by the Contractor. For pipe inspection, the electrode size shall be the pipe OD and consist of a rolling spring composed of square stainless steel wire. The spring

length shall fit securely to the surface of the pipe. The holiday detector manufacturers approved by the Department are:

A. D. E. Stearns Company
B. Spy Holiday Detectors
C. Tinker & Rasor

Upon completion of the pipeline construction prior to final clean up, the Department may conduct a Pearson Survey to detect coating holidays. The Contractor shall uncover all of the holidays detected. The coating shall be cleaned, dried, geeped and uncovered coating defects shall be repaired. Any uncovered Pearson indications that do not require coating repair will be at the Department's expense and limited to the excavation, inspection, backfill and final clean up. In either instance, all costs associated with the repair, including the excavation, coating repair, backfill and final clean up will be born by either the Contractor or the Department.

16.04 Cleaning Pipe Interior

Before joining, all fittings, lengths, and sections of pipe shall be inspected and thoroughly cleaned to remove all rust scale, dirt, snow, ice, water, or any other foreign material.

The Contractor shall install mechanical caps on the ends of all partially constructed mains and services for overnight periods or other periods of extended inactivity to prevent soil, water, and other materials from entering the pipe.

The completed pipeline shall be cleaned in the presence of the Inspector as follows:

A. Steel pipe, 2" and smaller, shall be cleaned by blowing with air
B. Steel pipe, 3" and larger, shall be cleaned by blowing through a pig with air

Alcohol shall be introduced in mains tested between September 1 and May 15. This shall be done prior to pigging. Contractor shall be furnished alcohol by the Department at 520 Garfield Avenue in amounts not to exceed the following per 1,000 feet:

2" - 0.4 Gallons	6" - 2.0 Gallons
3" - 0.6 Gallons	8" - 4.0 Gallons
4" - 1.0 Gallons	10" - 6.0 Gallons

16.05 Steel Pipe Installation

A. Expansion joints shall be furnished and installed in accordance with Sections 14.02.04(P) at locations indicated on the Plans or designated by the Engineer in the distribution system.

B. Bends in steel gas mains shall be made with weld fittings, approved bending equipment, except where deflections do not exceed 12-1/2 degrees, miter bends are permitted.

   Wrinkle bends are not permitted.

   No attempt shall be made to bend pipe except with bending equipment designed specifically for bending. Bending shall be within the allowable limits and meet the requirements of DOT Regulation, Section 192.313.

C. Damaged sections of pipe shall be removed and replaced by cutting the section out as a cylinder applying half sole patch, or a full encirclement closure. Damage shall include dents, scratches, gouges, grooves, or arc burns which, in the opinion of the Engineer, could cause stress concentrations. Refer to Section 15.03.03(F) for more information.

D. A directionally drilled pipe that is installed which has the sacrificial coating partially or completely missing and the FBE coating intact shall be considered a successful bore. The contractor shall provide means of internal inspection (geometry pig or approved alternate) to insure that the installed pipe is free of deleterious dents before tying the bore into the pipeline, as required by the Engineer.

E. Pipe in open trench shall be installed as shown on Detail Drawing EX-2 unless indicated otherwise on the plan. Where it is impossible or impractical to use encasement materials, rock shield (double wrapped around the circumference of the pipe and supplied by the contractor) may be used as determined by the Engineer.

F. Before backfilling, the pipe must be geeped with a holiday detector to confirm that no coating defects remain. Short replacement pieces or repairs to steel pipe need not be geeped.

16.06 Repair of Damaged Steel Pipe (192.307)

16.06.01 Transmission Main

Any repair on the transmission pipeline will require a procedure prepared by Engineering prior to any work. The pipeline will be taken out of service and pressure reduced below 20% of SMYS before any repair is made.

16.06.02 Distribution

Damaged steel pipe which must be corrected includes:

A. Dent which in addition contains a stress concentrator such as a weld joint, an arc burn, scratch, or gouge.

B. Dent which exceeds twice the wall thickness.
C. A scratch, gouge, or groove deeper than 12-1/2% of the wall thickness.
D. Arc burn

A gouge, groove, arc burn or dent may not be repaired by insert patching or by pounding out. If these defects are removed, they may only be removed by cutting out the damaged portion as a cylinder.

Each segment of generally corroded distribution pipe with a remaining wall thickness less than that required for the MAOP of the pipeline, or a remaining wall thickness less than 30% of the nominal wall thickness must be replaced or permanently repaired.

Repairs requiring correction during construction should be accomplished by cutting the damaged section out as a cylinder unless an alternate method is approved by the Engineer.

Temporary repairs may be made with band clamps, sleeves or couplings, provided they are appropriately rated by manufacturer for pressure, size and suitability for use on steel gas lines. The permanent repair should be made within nine (9) months of temporary repair.

Permanent repairs required on a damaged steel pipeline which is in service may include:
A. Cutting out and replacing portion as a cylinder.
B. Complete full encirclement weld sleeve.
C. On 6" and larger pipe, halve sole weld on patch.
D. Alternative repair composite reinforcement sleeve as approved by the Engineer.

All repairs of transmission and distribution steel gas pipe which require the replacement of pipe will be made using sections of pre-tested pipe that has been pressure tested to MAOP x 1.5 (Section 19) or at least 100 psi, whichever is greater. Repaired or replaced portions shall be rewrapped and/or coated in accordance with Section 25.

16.07 Joining Pipe and Fittings

16.07.01 General

Approved joints to be used for assembly of underground pipelines shall be according to the following tables unless detailed otherwise:

Table 16-1
Steel to Steel Joints

Jointing Between	Type of Joint
Steel Pipe Sections	Welded
Steel Pipe and Fittings	Welded
Steel Pipe and Plastic (1", 2", 3", 6", 8")	Weld End Transition Fitting
Steel Pipe and Valves	Weld Flanges, 150# or 300# or weld end
Steel Pipe Insulators	Weld Flanges, 150# or 300#
Steel Pipeline Expansion Joint within long casings	Stainless Steel Bellows Type in manhole

Table 16-2
Plastic Pipe to Steel Pipe or Copper Risers

Jointing Between	Type of Joint
5/8" Steel Service replaced with 1/2"plastic and 1"P.E. service replaced with P.E.	Existing old style Dresser 88 service tees must be refitted with new lock insert gasket, retainer cup & follower nut to conform to pullout resistance regulations. Otherwise, the tee must be abandoned & new 1" tees installed per 14.05.15 & Detail G-2.
5/8" O.D. steel or copper tube to 1/2" P.E.	Chicago Fitting

16.07.02 Welded Joints

Welders must be qualified according to the requirements of Section 27-Welding Qualifications.

A. Cutting — The edges or surfaces of parts to be joined by welding must be prepared by machining, grinding, flame cutting, or with a sanding disk. Edges prepared by flame cutting shall be dressed with a file, grinder, or sanding disk to produce a reasonably smooth and uniform surface. A flame cutting beveling machine shall be used to cut all 2" and larger pipe except that, where a beveling machine

cannot be used, the pipe may be cut with a wheel pipe cutter and grinder beveled. The inside edge of pipe cut with a wheel cutter must be filed or reamed to remove the cutting burr.

B. Cleaning — All surfaces within 1" of the weld area must be dry, cleaned of all rust, scale, primer, oil, or other foreign material. The parts to be welded shall be free from greasy or oily matter at least 2" from the weld edge or surface.

C. Mitering — Miter joints may be made but not to exceed a total pipe deflection of 3° on the transmission gas line and 10° on the distribution gas mains. Increasing the deflection by using multiple miter bends properly spaced is permitted but discouraged in favor of cutting a standard bend fitting. If multiple miter joints are used, the minimum distance measured at the crotch from joint to joint must not be less than 1-1/2 pipe diameter.

D. Alignment — Line up clamps shall be maintained in place until at least 50% of the root bead is deposited at uniform spacing around the joint.

E. Protection — Tents or shields must be used when necessary to protect the weld area from rain, snow, or high winds. Liquid must not be permitted to come in contact with the weld area.

F. Preheat — The environment or weld material shall be preheated to at least 50°F.

G. Clearance — **At least 24 inches of clearance under and around a joint should be provided for proper working space.**

H. Configuration — See Standard Detail No. G-4.

I. Gas Vapors — Welding must be done only under controlled conditions in the presence of gas. A controlled flame at the weld or removing the combustible mixture from the weld area are the alternatives to be selected. Air movers or other means must be employed if gas is to be kept from the area. Gas detection instruments must be used to measure environment to insure any method employed to keep gas away is effective.

J. Cleaning Between Passes — Scale and slag shall be removed from each bead and grove between passes by grinding, brushing, or chipping.

K. Inspection

Acceptability of a weld that is nondestructively tested or visually inspected is determined according to API 1104, Section 9. All welds must be visually inspected to ensure compliance with the welding procedure.

Each person responsible for inspecting welded joints must be qualified by training or experience to ensure that the welding is performed to the procedure in this manual.

The inspector reserves the option and without notice to have weld radiographed or to have test coupon cut as a supplement to visual examination. Cost of testing will be charged to Contractor if welds are not acceptable.

L. Inspection of Transmission Welds

All welds must be visually inspected to ensure compliance with the welding procedure. Inspection of welds on the transmission line will normally be doneby a third party. The Department will keep on file and accept the NDE procedures utilized by the third party of their methods.

The welds on a pipeline to be operated at a pressure that produces a hoop stress of 20 percent or more of SMYS must be nondestructively tested in accordance with § 192.243, except that welds that are visually inspected and approved by a qualified welding inspector need not be nondestructively tested if:
1. The pipe has a nominal diameter of less than 6 inches (152 millimeters); or
2. The pipeline is to be operated at a pressure that produces a hoop stress of less than 40 percent of SMYS and the welds are so limited in number that nondestructive testing is impractical.

M. Repair of Welds

Welds found unacceptable according to API Standard 1104, Section 9, must be removed or repaired. Weld must be removed if it has a crack that is more than 8% of the weld length. Rejected welds on lines not in service shall be removed. Rejected welds on lines in service may be repaired or encapsulated. Welds which are permitted to be repaired must have the defect removed down to sound metal and the segment to be repaired must be preheated if conditions would adversely affect the quality of weld repair. The repair of a previously repaired weld will not be permitted and shall be removed.

16.07.03 Flanged Connections

Flange faces must be similar. Flat face flanges may not connect to a raised face flange.

Alignment of the flanges to be joined shall be done before bolting. Bringing unaligned pipelines together by tightening, resulting in a permanently sprung connection, is prohibited. Bolts or studs shall be long enough that, with the gasket or insulator installed, they will extend completely through the nut with not less than two (2) exposed threads when tightened. Bolts or studs shall be tightened gradually and alternately so as to bring the flanges together with uniform and increasing pressure on all parts of the face.

See section 14.05 for torque requirements.

16.07.04 Steel (Extrube) to PE Repair Coupling, 5/8" ST to 1/2" PE Installation

The following procedure shall be used to connect 5/8" OD Steel or copper tube to 1/2" CTS (5/8" OD) PE pipe.

Installers of this fitting must be qualified according to Section 28.

A. Cut plastic square and deburr O.D. and I.D. Clean exposed plastic line with a clean, dry, grease-free cloth.

B. Mark tubing to stab depth at 1 1/2" from end with felt pen or suitable marker. Make sure not to scratch surface of plastic tubing with marker. Loosen nut 1 to 2 turns.
   Stab stiffener end of fitting over plastic service until plastic is bottomed. Flush with mark.

C. Tighten body onto nut using suitable wrenches until body meets nut shoulder, that is, "metal to metal."

D. Cut steel tube square, remove 1 1/2" of coating from end and deburr O.D. and I.D.

E. Loosen nut one to two turns.

F. Stab fitting over tubing until tube is bottomed and flush with edge of coating.

G. Tighten nut onto body using suitable wrenches, until nut shoulder meets body, that is, "metal to metal. "Steel end connection must have bitumastic applied and then taped.

16.08 Branch Main Connections, 2" and Larger

16.08.01 Connections to mains not in service

Connections to mains not in service may be made by the Contractor. Weld tees shall be installed where the branch and main are the same size or one size under. For branches more than one size under, saddles or tees and reducers may be used.

16.08.02 Connections to mains in service

Connections to mains which are in service (live) shall be done by the Department. The Department shall furnish and install saddles, nipples, and tapping valves, if required. The Department will furnish and install no-blo tees, stop off fittings, or bottom out fittings, if required.

Excavation, backfill and restoration shall be included as the Contractor's responsibility for all planned connections.

Hot tapping shall be performed only by trained & qualified personnel according to Section 16.09.

Department will furnish tools, machines, and personnel for any required operation as follows:

A. Operate gas valves.

B. Line stopper, bottom out connections, or by-pass operations.

C. All tapping, drilling, cutting of mains.

Branch connections to mains in service (live) will follow these policies.

16.08.03 Branch Connection Policy to Steel Mains in Service
(Refer to Detail Drawing G-3 or as spec on plan)

Branch Size	Main Size	
	Same as Branch	Larger than Branch
2"	1-1/4" or 2" No-Blo Valve Tee Weldolet w/Tap Valve	1-1/4" or 2" No-Blo Valve Tee Weld Saddle w/Tap Valve Weldolet w/Tap Valve
3"&4"	One Size Reduced Weld Saddle w/Tap Valve One Size Reduced Weldolet w/Tap Valve Bottom Out Stop (2" No-Blo Valve Tee for 3" PE Branch)	Weld Saddle w/Tap Valve Weldolet w/Tap Valve Bottom Out Stop (2" No-Blo Valve Tee for 3" PE Branch)
6"-12"	One Size Reduced Full Encirclement Tap Tee w/Tap Valve Bottom Out Stop	Full Encirclement Tap Tee w/Tap Valve Bottom Out Stop

16.09 Hot Taps on Gas Main - Procedures, Training and Qualifications

Tap fittings shall be connected to mains only by qualified welders or fusers. No hot taps will be allowed on the transmission line without taking it out of service, pressure reduced and a procedure developed.

Tap fitting connection must be pressure tested for leakage before tapping begins.

Operators performing hot taps shall be restricted to trained personnel listed in "Table of Hot Taps, Tools, Instructions and Qualifications". The operator (or at least one operator in the crew) shall have had the minimum training or certification listed in the schedule for each respective type of tap.

Instruction reference manuals or procedures shall be made available on the job site for each respective tap, except the self-tapping tees.

Table 16-3
Hot Taps, Tool, Instructions, Qualification

Type of Tap	Size	Detail	Machine Used	Operator(s)	Instruction Ref. & Qual.
3/4"x 5/8"Tap-N-Valve 1/2" x 5/8" mini-tee 3/4"x 1 1/8" Style 501	3/4" 1/2" 3/4"	G-2 G-2 G-2	None - self tap w/tool " "	Certified U.O. Personnel	Manuf. Manual " " Apprentice Program
Weldolet or Weld Saddle & Valve Weldolet or Weld Saddle & Valve Full Encirclement Tap Tee	2" & 3" 4" 6",8",10",& 12"	G-3 G-3 G-3	D-5 Mueller C1-36 Mueller C1-36 Mueller	Certified U.O. Personnel Certified U.O. Personnel Certified U.O. Personnel	Operating Instructions, Form 8513 Apprentice Program and Mueller Sch
No-Blo Valve Tee (Completion plug for No-blo &drill nipples)	1¼" & 1½" & 2" 1", 1¼", 1½" & 2"	G-4	D-5 Mueller H 17145 Mueller	Certified U.O. Personnel Certified U.O. Personnel	Apprentice Program & Mueller Sch
Stop (Completion Plugs)	1¼" & 2"		D-5 Mueller H 17145	Certified U.O. Personnel Certified U.O. Personnel	Low Pressure Line - Stopper Fitting Training Manual by Apprentice Program & Mueller Sch
Stop (Completion Plugs)	All Sizes 3", 4", 6" & 8" 10" & 12"		C1-36 Mueller 3SW Mueller 4SW Mueller	Certified U.O. Personnel Certified U.O. Personnel Certified U.O. Personnel	Operating Instructions, Form 8513 Operating Instructions, Form 8834 Apprentice Program & Mueller Sch

Table of Contents

17.01 General 1

17.02 Handling of Pipe, Fittings, etc. 1

17.03 Inspection of Pipe and Fittings. 1

17.04 Cleaning Pipe Interior 1

17.05 Plastic Pipe Installation 2

17.06 Repair of Damaged Plastic Pipe 4

17.07 Joining Pipe and Fittings 4

17.08 Fusion Joining of Plastic Pipe. 5

17.09 Socket Fusion Joint Procedure 6

17.10 Saddle Fusion Joint Procedure -Yellow or Orange Pipe 7

17.11 Butt Fusion Joint Procedure 10

17.12 Procedure for Fusion Joining of Fittings and Pipe Having a Different Base Plastic 12

17.13 Cold Weather Fusion Procedures 13

17.14 Plastic Pipe Couplings, LYCOFIT Installation Procedure, 1" SDR 9.3 and 1/2" SDR 7 Pipe 14

17.15 Plastic Pipe Stab Couplings, Con-Stab Installation Procedure, 1" SDR 9.3 and ½" SDR 7 Pipe 14

17.16 Electrofusion Couplings (1/2", 1",2", 3", 6", 8") Installation using an Approved Electrofusion Unit. 15

17.17 Electrofusion Tapping Tees (2",3" ,6",8") Installation Using an Approved Electrofusion Unit 17

17.18 Re-Fusion of Electrofusion Fittings 18

17.19 Branch Main Connections, 2" and Larger 18

17.20 Branch Connection Policy to Plastic Mains in Service 19

17.21 Hot Taps on Gas Main - Procedures, Training and Qualifications 19

Table 17-1: Plastic to Plastic Pipe Joints 4

Table 17-2: Plastic to Plastic Repair (Department Only) 5

Table 17-3: Plastic to Plastic Service Tee 5

Table 17-4: Socket Fusion Time Cycles - Yellow or Orange Pipe 7

Table 17-5: Service Tap Tee and Service Saddle Fusion Time Cycles.....8

Table 17-6: Branch Saddle Fusion Time Cycles - with 2" Outlet 8

Table 17-7: Butt Fusion Time Cycles for Orange or Yellow Pipe.....11

Table 17-8: Butt Fusion for Dupont Aldyl "A" (Tan) Pipe 11

Table 17-9: Bead Diameter after Fusion.....12

Table 17-10: Fusion Time Cycles for Tan Dupont Aldyl "A" Pipe and Yellow or Orange Saddle Fittings.....13

Table 17-11: Hot Taps, Tool, Instructions, Qualification.....19

Figure 17-1: Socket Fusion.....7

Figure 17-2: Saddle Joint.....**Error! Bookmark not defined.**

Figure 17-3: Butt Joint 12

17.01 General

This section of the Standard Specifications establishes requirements and policies for the installation of plastic gas distribution systems.

17.02 Handling of Pipe and Fittings

The Contractor shall have adequate equipment on the site for unloading, supporting, and lowering pipe and fittings into trench. Pipe shall not be rolled, dragged, dropped, or allowed to contact sharp or hard objects which could cause injury to the pipe or coating. Fabric slings or soft padded devices shall be used so as to protect the pipe or coating. Pipe and fitting should be adequately secured to limit movement during transporting. Pipe stored outside shall have ends capped to prevent entry of water or debris, except when it is possible to visually determine that the pipe is clean before installation.

Care shall be exercised at all times to protect plastic material from fire, excessive heat or harmful chemicals.

Plastic pipe and tubing shall be adequately supported during storage. Thermoplastic pipe, tubing, and fittings shall be protected from long term exposure to direct sunlight.

Extra care shall be taken when handling plastic pipe in cold weather below 40°F to avoid damage to the pipe ends caused by impact with hard surfaces such as frozen earth or concrete. Pipe shall not be dropped. Coils of pipe shall be warmed before pipe is uncoiled and shall be mounted on a device which rotates to permit a straight pipe when unreeled. Sprung or spiraled pipe shall be straightened by hand.

17.03 Inspection of Pipe and Fittings

Error! Bookmark not defined.

Before installation, all fittings, lengths, and sections of pipe shall be thoroughly cleaned inside and inspected for defects. Plastic pipe shall be inspected for cuts, scratches, gouges, kinks, severe out-of-roundness, and other imperfections.

17.04 Cleaning Pipe Interior

Before joining, all fittings, lengths, and sections of pipe shall be inspected and thoroughly cleaned to remove all rust scale, dirt, snow, ice, water, or any other foreign material.

The Contractor shall install mechanical or fusion caps on the ends of all partially constructed mains and services for overnight periods or other periods of extended inactivity to prevent soil, water, and other materials from entering the pipe.

The completed pipeline shall be cleaned in the presence of the Inspector as follows:

A. Plastic pipe, 1" and smaller, shall be blown with air.

B. Plastic pipe, 2" and larger, shall have a foam pig blown through with compressed air.

Alcohol shall be introduced in mains tested between September 1 and May 15. This shall be done prior to pigging. Contractor shall be furnished alcohol by the Department at 520 Garfield Avenue in amounts not to exceed the following per 1,000 feet:

2" - 0.4 Gallons	6" - 2.0 Gallons
3" - 0.6 Gallons	8" - 4.0 Gallons
4" - 1.0 Gallons	10" - 6.0 Gallons

17.05 Plastic Pipe Installation

A. Plastic pipe shall be laid with uniform support on undisturbed or well compacted soil. Pipe bed shall not contain large rocks, blocks, or any other material which could injure the pipe or result in non-uniform support.

B. Plastic pipe shall be laid and backfilled with its natural slack in trenches. Excessive tension to straighten out pipe is not permitted.

C. Locating wire shall be laid on or within 3 inches of every plastic gas pipe.

   Service locating wire shall be connected to main locating wire. Approved method of connection includes: soldered, split bolt type electrical connector, or other as may be approved by the Engineer. All connections shall be protected to make them watertight except the ends where they are brought up in valve boxes or at service risers. Waterproofing material shall be 3M 2200 pads or approved equal.

   Locating wire, at valves, shall be brought up in valve box using 1/2" PE section to enclose the wire.

   Locate wire and connectors placed during directional boring must be approved prior to work being performed.

D. Bending plastic pipe is permitted up to the radius of its shipping coil. Pipes 4 inch and larger may be deflected to a minimum radius of 125 times pipe diameter at joints and 20 times the pipe diameter otherwise.

E. Pulling plastic pipe through auger and bore holes may be done with power equipment only if a "weak link" section, approved by the Engineer, is used in the pulling assembly. Every effort should be made to pull and/or push the inserted pipe through by hand. If winch or machine power is required, a "weak link" designated by the Engineer shall be used in the pulling assembly. Weak link may be a pulling head or next smaller diameter pipe than that being pulled.

F. Pipe shall not be installed in cold weather (40°F or less) except in a special arrangement and with approval of the Engineer.

G. Installation of plastic pipe by plowing is permitted provided the pipe is not stretched at any time in the operation. Plow chute shall not bend pipe more than a radius of 15 times pipe diameter.

H. Installation of plastic pipe by pull plug is not permitted.

I. Installation by insertion in casing pipes or abandoned mains shall be preceded by proper preparation. Obstructions such as old service taps, bends, drips, etc., shall be cut out and the leading pipe ends padded as necessary to prevent scratching the inserted pipe. Locating wire shall be laid to and attached to casing but not laid inside casing. Pipe inserted through more than 100' of casing will require anchors at each end to restrain the plastic main. The Engineer will provide an anchor detail. Openings at casing ends where pipe is inserted through less than 100 feet of casing and without anchors shall be sealed with injected sealant foam.

When plastic gas pipe is inserted through a steel casing, the tracer wire shall be attached by cadweld to each end of the casing prior to pipe insertion.

Ends of casing or cut pipe shall be at least 12 inches from any connecting service with branch tee.

Plastic pipe installed through casings which are in the 5-foot frost zone are subject to being squeezed off by ice. Casings subject to these conditions must be sized as follows:

1/2" PE Gas Pipe	3/4" or 1" Casing
1" PE Gas Pipe	1 1/4" or 1 1/2" Casing
2" PE Gas Pipe	2 1/2", 3", 4" Casing
3" PE Gas Pipe	4", 6" Casing
6" PE Gas Pipe	8", 10" Casing

Larger than 6" P.E. gas pipe must be approved by the Engineer.

J. Pneumatic tunneling (moling) shall be done with caution to avoid damage to foreign utilities. When it is not clear that elevation or location clearance can be maintained, the Contractor shall expose the foreign utility before tunneling. The Engineer may further limit lengths between excavations to insure that depth limitations are not either excessive or insufficient. Follow procedure in Section 15.03 for sewer main or service crossing.

K. Plastic gas mains 6" or larger in size and in open trench shall always be installed as shown on Detail Drawing number EX-2 unless otherwise indicated on the plans. This shall not apply when pipe is inserted through bored holes. Cost of bedding and cover shall be included in unit bid price for pipe installation.

17.06 Repair of Damaged Plastic Pipe

Damaged pipe requiring repair or replacement include scratches or gouges which have a depth of 10% or more of the wall thickness, pipe which has been stretched or kinked beyond the elastic limit; i.e., will never recover original shape or length, except for a squeeze off location.

Repair of defects during the construction of plastic pipelines should be accomplished by cutting out the defective parts and replacing section by using the same materials and methods for new construction.

After a plastic pipeline has been in service, a number of approved fittings (Section 16.07) may be used to repair or replace defects. Repairs must also be made to plastic pipe using sections of pipe that has been pre-tested to 100 psi.

Whenever plastic pipe is squeezed or pinched off for any reason, the location of the squeeze or pinch must be permanently marked with wraps of electrical tape or a split plastic clamp so the location will not be used for another squeeze-off in the future.

When repairs have been made, the tracer wire must be reconnected for continuity. Connections are to be made with 3M type connectors or approved equivalent and must be made waterproof by the use of 3M 2200 pads or approved equivalent. Tracer wires are not to be attached to the steel gas main, steel services, or service tees.

17.07 Joining Pipe and Fittings - General

Approved joints to be used for assembly of underground pipelines shall be according to the following tables unless detailed otherwise:

Table 17-1
Plastic to Plastic Pipe Joints

Jointing Between	Type of Joint
1/2" and 1"	Socket Fusion, Electrofusion or Mechanical fitting (by Department only) (Con-Stab or lycofit,) or
2" and 3"	Socket, Butt Fusion, or Electrofusion
6"	Butt Fusion & Electrofusion
8"	Butt Fusion & Electrofusion

Table 17-2
Plastic to Plastic Repair (Department only)

Jointing Between	Type of Joint
1/2" and 1"	Socket Fusion Coupling or "Lycofit" Type Plastic Pipe Repair Coupling- or "Con-Stab type 52, 53 or 56"
2" and 3"	Electrofusion coupling, socket fusion coupling, or butt fusion
6" and 8"	Butt fusion and electrofusion coupling
6" & 8"(temporarily)	Band clamp may be used for temporary repairs. Permanent repairs must be scheduled

Table 17-3
Plastic to Plastic Service Tee

Jointing Between	Type of Joint
1/2", 1", 2", 3", 6" and 8"	Saddle & Electrofusion

17.08 Fusion Joining of Plastic Pipe

All fusion joining shall be done only by persons currently certified by the Public Works and Utilities Department according to these Standards.

Skillful application of techniques and the use of proper materials and equipment in good condition are required to achieve sound joints in plastic piping by the heat-fusion method. Inspection provisions shall be adequate to assure that sound joints are being made. The quality of the joints shall be checked visually. If there is any reason to believe the joint is defective, it shall be removed and replaced.

No fusion joining shall be done unless the proper and full quantity of tools are used.

Fusion joining between different types of plastics shall only be made to connect a service tee or branch saddle to the tan Dupont Aldyl "A" 6" pipe. Respective heating cycles for each type of plastic are listed in Table 17-10.

Direct application of heat with a torch or other flame is prohibited.

Special procedures outlined below shall be applied for fusion joining in cold weather. No work shall be done when it is below 0°F, raining, sleeting, or snowing, unless an artificial shelter is provided to enclose the work sufficiently to maintain an environment to comply with these specifications.

17.09 Socket Fusion Joint Procedure

A. End Preparations

1. Using a pipe cutter, cut off damaged or oval ends of pipe squarely.

2. Using chamfering tool to remove about 1/16" of the sharp corner at the pipe end on the outside surface of pipe. Remove burrs and chips inside pipe ends.

3. To prepare pipe for correct penetration into socket, place depth gauge down flush on end of pipe.

4. Place cold ring clamp around pipe, adjacent to depth gauge. After securing cold ring clamp, remove depth gauge.

5. Fitting surfaces should be clean and dry--wipe with cloth--do not touch with hands. Clean surfaces with alcohol and lint free material.

6. The socket faces of the heating tool should be at $500^{\circ} \pm 10^{\circ}$F and clean.

7. First, firmly seat the socket fitting on the male face of the heating tool. Then place the female face on the end of the pipe firmly against the cold ring clamp. Heating time starts now.

B. Heating

1. While holding the fitting firmly in a fixed position, rotate heating tool slightly to feel the melt, and promote uniform heating of pipe and fitting.

2. Snap the heating tool and fitting from the melted pipe by holding upper part of tool handle with one hand and rapping sharply on the handle with the free hand. Immediately remove fitting from heating tool.

3. The heated parts are inspected quickly to make sure all surfaces have been melted. See Figure 17-1.

4. If melt is not complete, cut off melted pipe end, use a new fitting, and repeat fusion process from the beginning.

Figure 17-1
Socket Fusion

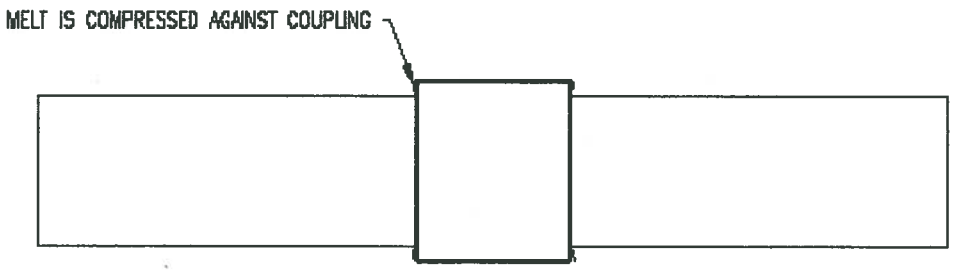

C. Fusion and Cooling

1. Within 3 seconds after the heating tool has been removed, firmly push the melted fitting squarely onto the pipe and until it makes firm contact with the cold ring clamp. DO NOT TWIST. Hold the fitting firmly in place for total cooling time shown in Table 17-4 to insure proper alignment.
2. After waiting 3 additional minutes cooling time, remove the cold ring clamp and inspect the joint. A good joint will have a uniform melt ring that is flat against the socket and perpendicular to the pipe. There should be no cavity between the fitting and the pipe.
3. Wait an additional 10 minutes to complete cooling before the pipe joint is tested or stressed during burial.

Table 17-4
Socket Fusion Time Cycles – Yellow or Orange Pipe

Pipe Size (inches)	*Heating Time Cycle (seconds)	Cooling Time Cycle (seconds)
1/2" CTS	6	20
1" CTS	9	20
2" IPS	16	30
3" IPS	20	30

* Guidelines only, exact time depends on environmental conditions and condition of fusion equipment.

17.10 Saddle Fusion Joint Procedure -Yellow or Orange Pipe

The use of application tool is required for installing service tap tees and service saddles. An application tool is required for installing branch saddles. Assemble application unit according to manufacturer's instructions and position on pipe.

A. Surface Preparation

1. Remove surface skin from the melt areas of the clean, dry pipe and saddle fitting by roughening with medium grit emery or garnet cloth.

2. Brush away residue with dry rag after roughening. Clean area with alcohol and lint free material.

B. Heating

1. With the heating surfaces of the tool at $500^{\circ} \pm 10^{\circ}$F place the tool in position on pipe. Place fitting against heater faces and apply pressure.

2. Heat for time shown in Table 17-5 or 17-6.

3. With experience, the iron can be rotated slightly and slowly as the melt forms--do not rotate excessively as this will enlarge the melt pattern on the pipe.

Table 17-5
Service Tap Tee and Service Saddle Fusion Time Cycles

IPS PIPE SIZE (INCHES)	*HEATING TIME CYCLE (SECONDS)	COOLING TIME CYCLE (SECONDS)
2	40	60
3	40	60
6	40	60
8	40	60

Table 17-6
Branch Saddle Fusion Time Cycles - with 2" Outlet

IPS PIPE SIZE (INCHES)	*HEATING TIME CYCLE (SECONDS)	COOLING TIME CYCLE (SECONDS)
2	60	120
3	70-80	120
6	80-90	180
8	80-90	180

* Guidelines only, exact time depends upon environmental conditions and conditions of fusion equipment.

4. After proper melt time, raise fitting and remove heater from pipe. DO NOT displace melt on pipe and fitting surfaces. Check melt pattern on pipe and fittings--heated surfaces on fitting and pipe should be 100% melted with no cold spots. (Use a mirror to check the melt on the under surface of the saddle base.)

C. Fusion and Cooling

1. If melt patterns are satisfactory, press the fitting on the pipe quickly (within 3 seconds) with a pressure of 60-80 psi until a melt bead of the following size appears around the entire base of the fitting:

PIPE SIZE	BEAD THICKNESS
2"	1/8"
3" & larger	larger than 1/8"

Adjust fusion unit to maintain pressure of fitting on pipe. Allow fusion joint to cool for at least the times indicated in Table 17-5 or 17-6 before releasing pressure. If melt pattern on fitting or pipe is unsatisfactory after heating, apply fitting to pipe and let cool. Remove cutter from tapping tee and cut off fitting top to avoid misuse later. Repeat procedure from Step (a).

2. After letting joint cool 3 minutes beyond that shown in the tables, remove application unit from pipe.

3. Visually check fitting for fusion melt bead around entire fitting base. See Figure 17-2 for visual parameters of proper Saddle Fusion. If fusion joint quality is unacceptable or doubtful, cut off fitting top and apply a new fitting to a new section of pipe.

4. Let fusion cool an additional 10 minutes prior to pressure testing and tapping the main.

Figure 17-2
Saddle Joint

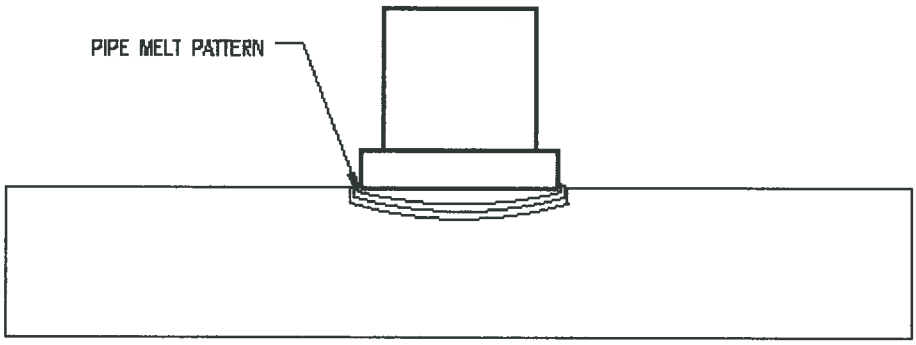

17.11 Butt Fusion Joint Procedure

A. End Preparation

1. Clean each pipe end with alcohol using lint free materials.

2. Insert facing unit between pipe ends and lock onto guide rods. Face ends of pipe to be fused.

3. Check alignment of pipe ends. Adjust high-low if necessary. If adjustment is made, reinsert facing unit and give several additional turns without repositioning the pipes in the clamps.

4. Check heater plate for temperature and wipe surface clean.

B. Heating

1. Insert heater plate between aligned ends and bring ends firmly in contact with plate, but DO NOT APPLY PRESSURE.

2. Heat for times shown below.

Table 17-7
Butt Fusion Time Cycles for Orange or Yellow Pipe

IPS PIPE SIZE (INCHES)	*HEATER AT 500°(+)10°F	*HEATER AT 440°(+)10°F	COOLING TIME CYCLES (SECS.)
2	15	40	60
3	20	50	60
6-SDR 21	25	60	120
6-SDR 11.5	40	90	150
8-SDR 11.5	62	100	240

Table 17-8
Butt Fusion for Dupont Aldyl "A" (Tan) Pipe

IPS PIPE SIZE (INCHES)	*HEATER AT 340(+)5°F	COOLING TIME CYCLE (SECONDS)
6" - SDR 21	120	120
6" - SDR 11.5	150	150

* Guidelines only, exact time depends upon environmental conditions and conditions of fusion equipment.

C. Fusion and Cooling

1. Remove heater plate after achieving proper melt bead.

2. Bring melted ends together rapidly. DO NOT SLAM. Apply enough force to achieve a double roll back of each bead onto the pipe.

3. Allow the butt fusion to cool, under pressure, for the time shown in Table 4.

4. DO NOT remove the fused joint from the equipment for an additional 3 minutes after cooling time.

   DO NOT test, stress, pull or lay in ground for 10 minutes after removal from fusion unit.

5. See Figure 17-4 for visual parameters of a proper fusion.

   Each bead after fusion should have approximately the following diameters:

Table 15-9
Bead Diameter after Fusion

PIPE SIZE	SDR NO.	BEAD THICKNESS
2" IPS	11	1/16" TO 1/8"
3" IPS	11 - 11.5	1/8"
6" IPS	11 - 11.5	3/16"
8" IPS	11 - 11.5	1/4"

Figure 17-3
Butt Joint

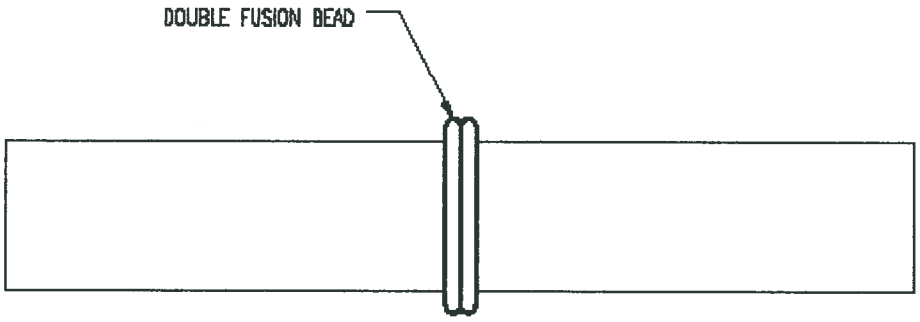

17.12 Procedure for Fusion Joining of Fittings and Pipe Having a Different Base Plastic

Orange and yellow pipe and fittings are of the same base plastic and require no differential time for fusion joining.

Orange or yellow fittings, when being fusion joined to tan colored Dupont Aldyl "A" pipe, require a differential in the required heating times. The tool temperature (500°F ± 5°) does not change for orange/yellow or tan material when making saddle type fusions.

The heating tool shall be first placed on the yellow or orange saddle fitting, which requires a longer heating time; then after the difference in heating time has lapsed between the materials, the companion heating tool is applied to the tan pipe. Both tools are to be removed simultaneously when the remaining time expires. Tables 15-1 and 15-2 shall be used for the orange or yellow heating cycles and the following Table 15-6 for tan colored Dupont Aldyl "A" material.

Table 17-10
Fusion Time Cycles for Tan Dupont Aldyl "A" Pipe and Yellow or Orange Saddle Fittings

*HEATING TIME ON TAN DUPONT ALDYL PIPE YELLOW SADDLE (SECONDS)	*HEATING TIME ON ORANGE OR COOLING TIME (SECONDS)	CYLCLE (SECS)
Service Tap Tee/ Service Saddle 20	40	120
Branch Saddle 35-45	60	120

DO NOT remove the fused joint from the equipment for an additional 3 minutes after cooling time.

*Guidelines only, exact time depends upon environmental conditions and conditions of fusion equipment.

17.13 Cold Weather Fusion Procedures

Cold weather fusion procedures established below shall be used when temperature is between 0°F and 40°F.

1. All traces of frost, ice, and water shall be removed from both the joining and clamping surfaces. Heating tools shall not be used for this purpose.

2. Cold ring clamps shall be used to check ends of pipe to be joined. If ends of pipe are damaged or distorted, they shall be cut off.

3. Two cold ring clamps may be necessary (one behind the usual location of the first clamp) to prevent slipping due to pipe construction. Shim material of paper or tape must only be inserted in the secondary cold ring, allowing room for expansion of the pipe in the first cold ring during heating cycle.

4. Socket Fusions. The fitting shall be placed on the tool before stabbing the pipe into the tool. Time, in the following table, begins when the pipe is completely on tool. When time is up, snap the pipe from the tool first, followed by the fitting.

5. For cooling times, see Procedures A through D.

FUSION TIME (SECONDS) - COLD WEATHER

Temperature	40°	30°	20°	10°	0°
1" & 2" Sockets	21	22	23	27	28
3" Sockets	22	23	24	28	29

Saddle Fusions. Apply the heating cycle in the above table, substituting main size. If melt is not satisfactory, begin at new location and increase time by not more than 3 seconds per trial.

Butt Fusions. Apply the same heating cycle as in warm weather. If good joint is not obtained, cut out joint, repeat procedure increasing heating cycle. Do not increase pressure on joint to compensate low temperatures.

17.14 Plastic Pipe Couplings, LYCOFIT Installation Procedure, 1" SDR 9.3 and 1/2" SDR 7 Pipe

A. Make sure size and wall thickness or SDR marked on LYCOFIT matches those of pipe to be joined. Refer to illustration package with each fitting.

B. Make sure inside and outside of pipe and LYCOFIT are clean and dry. **DO NOT LUBRICATE PIPE, TUBING OR LYCOFIT!**

C. Slide LYCOFIT SLEEVES onto pipe first.

D. Position pipe jaw vise grip on pipe. Use only the LYCOFIT assembly tool, insert LYCOFIT spigot into pipe until pipe covers last barb on spigot. DO NOT INSERT AGAINST PIPE STOP.

E. Remove vise grip, advance the LYCOFIT sleeve over the pipe until it meets the flange on the spigot.

F. Pressure test to comply with Construction Specifications.

17.15 Plastic Pipe Stab Couplings, Con-Stab Installation Procedure, 1" SDR 9.3 and ½" SDR 7 Pipe

A. Verify the pipe or tubing being assembled is the correct size.

B. Cut pipe ends square.

C. Clean piping thoroughly to assure there is **no dirt, grease or oil in assembly area**.

D. Chamfer end of pipe using the Continental O.D./I.D. chamfering tool.

E. Mark the stab depth using one of the methods listed below.

1. Holding the piping against the collar on the fitting, mark the pipe at the entrance of fitting.

2. O.D./I.D. chamfering tool is also a depth gauge. Insert pipe into tool until it stops, mark pipe at entrance of tool.

3. Measure stab length, which is 1-7/8" from chamfered end of piping.

F. Stab pipe completely into fitting so that the mark on the pipe is within 1/8" from the fitting entrance.

G. Pressure test to comply with Construction Specifications.

17.16 Electrofusion Couplings (1/2", 1",2", 3", 6", 8") Installation using an Approved Electrofusion Unit.

A. Electrofusion Joining Procedures:

1. Clean the pipe ends by removing dirt, mud, and other debris, with a clean, disposable lint free material. Clean water can be used for initial cleaning prior to scraping and isopropyl alcohol is recommended after scraping.

2. Check pipe for out-of-round condition. If fusion area is found to be out-of-round, take appropriate steps to bring fusion area back within required tolerances.

3. When installing a coupling, it is necessary for the pipe ends to be cut. This can be accomplished by various methods below:

- for sizes 3" or less, using a blade type of pipe cutter, or a tubing cutter
- for sizes 3" or larger, a sawsall or hand using a clamp as a guide
- for 6" and larger, a chain saw (without bar oil) may be also used

4. Measure the stab depth on both pipe ends by placing the coupling next to the pipe as required by the manufacturer and marking the depth with a non-greasy marker.

5. Check the pipe surface for any embedded debris that may cause damage to the scraping tools and once more make sure that the outer pipe surface is clean and free of any dirt or mud that could contaminate the scraped pipe surfaces.

6. Scrape the outside of the pipe surface to remove oxidation and other contaminates. Use an appropriate scraping tool, as recommended by the pipe or fitting manufacturer and approved by the Public Works and Utilities Department. Scrape the pipe surface until the outer layer or "skin" of the pipe has been removed to expose a clean, virgin pipe material as per pipe manufacturer's recommendation. Inspect the entire scraped area to ensure total scraping coverage. For pipe smaller than 6-inch, if a coupling is to be pushed completely over one pipe end, scrape the pipe end for the entire length of the coupler to prevent contamination of the coupler by sliding over un-scraped pipe. **Do not use abrasives, grinding wheels, or other devices that do not cleanly remove the contaminated material.**

7. Clean scraped area thoroughly with a clean, lint free towel and isopropyl alcohol and allow to dry before assembly. Avoid touching the scraped pipe surface or the inside of the coupler as body oils and other contaminates can affect fusion joint performance. If the surfaces become contaminated, repeat cleaning procedure. Do not use alcohol with any additives other than water.

8. Place the fitting on the area to be fused and restrain using an approved restraint device.

9. Attach processor leads to the fitting and proceed with fusion as described for standard joining, per manufacturer's instructions.

10. Disconnect and remove processor leads when fusion cycle is complete.

11. Allow fitting to cool in accordance with recommended cooling time before pressure testing or rough handling.

B. Electrofusion Couplings:

1. For New Installation:

   Slide coupling half-way over one pipe end. Slide mating pipe into other half of coupling so that the coupling lines up between the marks made in step 4 of **Electrofusion Joining Procedures.**

2. For Repair:

   Slide one coupling over each end of repair section of pipe. Position repair section of pipe in place between existing pipe ends. Slide couplings over the joints to line up between the marks made in Step (d) of **Electrofusion Joining Procedures.**

17.17 Electrofusion Tapping Tees (2",3" ,6",8") Installation Using an Approved Electrofusion Unit

Electrofusion Tapping Tee Procedures

1. Clean the area of the pipe to be fused by removing dirt, mud, and other debris, with a clean, disposable lint free material from pipe ends. Clean water can be used for initial cleaning prior to scraping and isopropyl alcohol is recommended after scraping.

2. Check pipe for out-of-round condition. If fusion area is found to be out-of-round, take appropriate steps to bring fusion area back within required tolerances

3. Identify the location of the fitting to be installed on the pipe, as recommended by the manufacturer, by marking the area with a non-greasy marker.

4. Check the pipe surface for any embedded debris that may cause damage to the scraping tools and once more make sure that the outer pipe surface is clean and free of any dirt or mud that could contaminate the scraped pipe surfaces.

5. Scrape the outside of the pipe surface to remove oxidation and other contaminates. Use an appropriate scraping tool, as recommended by the pipe or fitting manufacturer and approved by the Public Works and Utilities Department. Scrape the pipe surface until the outer layer or "skin" of the pipe has been removed to expose a clean, virgin pipe material per pipe manufacturer's recommendation. Inspect the entire scraped area to ensure total scraping coverage. **Do not use abrasives, grinding wheels, or other devices that do not cleanly remove the contaminated material.**

6. Clean scraped area thoroughly with a clean, lint free towel and isopropyl alcohol and allow to dry before assembly. Avoid touching the scraped pipe surface or the inside of the coupler as body oils and other contaminates can affect fusion joint performance. If the surfaces become contaminated, repeat cleaning procedure. Do not use alcohol with any additives other than water.

7. Remove the fitting from the bag. Clean fitting with alcohol and lint free towel if needed, then place it in the area to be fused.

8. Without moving the fitting, slide the under clamp onto the base of the fitting.

9. Make sure the fitting is centered in the under clamp and then pull the cantilever into the secure position.

10. Attach processor leads to the fitting and proceed with fusion as described for standard joining, per manufacturer's instructions

11. Disconnect and remove leads when fusion cycle is complete.

12. Allow fitting to cool in accordance with recommended cooling time before pressure testing or rough handling.

17.18 Re-Fusion of Electrofusion Fittings

Central Plastics electrofusion fittings can be re-fused (Engineering or welders approval needed) only in the event of an input power interruption, i.e. fusion leads were detached during fusion, generator runs out of gas, processor malfunction, or other circumstance that results in processor input power interruption.

The recommended procedure for re-fusing fittings is:

a. Fitting should remain in clamped position and be allowed to cool to ambient temperature.

b. The fitting should be reconnected to the processor and fused for the entire fusion time.

This re-fusion procedure should be used for fusions that terminated due to input power reasons only.

Fittings that fault for any other reason should be cut out and replaced.

17.19 Branch Main Connections, 2" and Larger

Connections to mains not in service may be made by the Contractor. Fused tees shall be installed where the branch and main are the same size or one size under. For branches more than one size under, saddles or tees and reducers may be used.

Connections to mains which are in service (live) shall be done by the Department. The Department shall furnish and install saddles, high volume tees and valves, if required.

Excavation, backfill, and restoration shall be included as the Contractor's responsibility for all planned connections.

Hot tapping shall be performed only by trained & qualified personnel according to Section 17-21.

Department will furnish tools, machines, and personnel for any required operation as follows:

A. Operate gas valves.

B. Squeeze off plastic mains.

Branch connections to mains in service (live) will follow these policies.

17.20 Branch Connection Policy to Plastic Mains in Service

Plastic branch connections to live plastic mains will be made with branching saddles or electrofusion high volume tapping tee. Saddle shall be the same plastic type and grade as the live plastic main. Different plastics shall join at socket joints when necessary.

17.21 Hot Taps on Gas Main - Procedures, Training and Qualifications

Tap fittings shall be connected to mains only by qualified welders or fusers.

Tap fitting connection must be pressure tested for leakage before tapping begins.

Operators performing hot taps shall be restricted to trained personnel listed in "Table of Hot Taps, Tools, Instructions and Qualifications". The operator (or at least one operator in the crew) shall have had the minimum training or certification listed in the schedule for each respective type of tap.

Instruction reference manuals or procedures shall be made available on the job site for each respective tap, except the self-tapping tees.

Table 17-11
Hot Taps, Tool, Instructions, Qualification

Type of Tap	Size	Detail	Machine Used	Operator(s)	Instruction Ref. & Qual.
PE Service Tees	½" & 1"	G-10 G-11	None - self tap w/hex tool	Certified U.O. Personnel Contractor	Manuf. Manual Fusion School & Qualifications
PE Branch Saddles	2" & 3"		Dupont 2" B.S. Tapping Tool	Welders	Instruction in Tool Box
Electrofusion High Volume Tee	2"		Self-Tap w/Hex Tool	Certified U.O. Personnel	Fusion School Certification

Table of Contents

18.01 General 1

18.02 Valves 1

18.01 General

This section of the Standard Specifications establishes requirements and policies for the installation of both steel and plastic gas distribution and transmission valves.

18.02 Valves

Flanged valve shall be installed where indicated on the Plans. Valves shall be set upright, on blocks to undisturbed earth and backfill tamped around and up to a point 4 to 6 inches below the top of operating nut.

The box, as specified in Section 14.05.05, shall be adjusted to proper height by first cutting the top stem of the plastic bottom section. If necessary, the bonnet portion may be trimmed to shorten the height. Bottom section shall be set on 2 inch wood blocking and uniformly backfilled to keep the box plumb and on center. Box shall not rest on valve or on main.

Valves installed on the inlet side of regulator stations will be located at sufficient distance to permit the operation of the valve during an emergency.

Valve types, when not indicated on the Plans, shall be determined from the following current Department practice:

	Plastic Type 2" & 3"	Plastic Plug Type 1"	Steel Gate (Kerotest) 2" & over	Steel Plug 1-1/2" & over	Steel Ball 2" & over
Line Valves in PE Mains	X	X			
P.E. to P.E. Branch	X	X			
P.E. Service	X	X			
P.E. Branch Off Steel with No-blo Tee Connex.	X				
Tap Off Steel Main			X		X
Reliefs (Above Ground)			X		X
Line Valves for Steel Mains			X		X
Steel Risers (2" & larger)			X		X
Reg. Station (Above Ground)			X	X	X

Table of Contents

19.01 General 1

19.02 Transmission Line Testing 1

19.03 Gas Main Testing 2

19.04 Gas Services Testing 2

19.05 Test Records 3

19.01 General

All testing apparatus shall be furnished and installed by the Contractor. Cost of testing shall be incidental to the main or service. Test gauge furnished shall be graduated in not more than 2 psi increments.

19.02 Transmission Line Testing. (Operating at Hoop Stress of 30% or more of SMYS [192.505(a)])

A. Test Pressure: The minimum test pressure will be 150% of the maximum operating pressure in Class 3 and 4 locations, and will be 125% of the maximum operating pressure in Class 1 and 2 locations. The maximum test pressure depends on the strength of the pipeline and the components in it. If water is the test medium, elevation must be considered.

B. Test Medium: In Class 1 or Class 2 locations, if there is a building intended for human occupancy within 300 feet of a pipeline, a hydrostatic test is required (except as noted below) on the segment within 300 feet of such a building, but in no event may the test section be less than 600 feet unless the new or relocated pipe is less than 600 feet.

   NOTE: *Air or inert gas may be used if the building is evacuated while the hoop stress exceeds 50% of SMYS.*

   In Class 1 and Class 2 locations, the regulator station must be tested to at least Class 3 location requirements. [192.505(b)]

C. Test Duration: The test pressure must be maintained for a minimum of eight hours in addition to the stabilization period. [192.505(c)]

D. Fabricated Units and Short Sections: For fabricated units and short sections of pipe, where post installation test is impractical, pre-tested pipe shall be used. Pretested pipe must be pressure tested for at least four hours. [192.505(e)]

E. Components Other Than Pipe: No test is required for components that are the only item being replaced if:

   The component was tested to at least the pressure required for the pipeline to which it is being added, or the component was manufactured under a quality control system that ensures that each item manufactured is at least equal in strength to the pressure required for the pipeline to which it is being added (fittings, valves, regulators, relief valves, etc.).

19.03 Gas Main Testing

All new or reinstated mains shall be pressure tested after backfilling but before being placed into service. Main shall be isolated from the existing system. Valves shall not be used to isolate or to hold test pressure. On tie-ins and appurtenances, where the air test is impractical, the test shall consist of soap testing all joints and fittings under operating pressure, provided pre-tested pipe is used (Section 16).

Mains to have an MAOP of 66 psig or less shall be pressure tested with air at 100 psig. Mains to have an MAOP greater than 66 psig, but operating at a hoop stress less than 30 percent of SMYS, shall be pressure tested to MAOP x 1.5 with air, inert gas, natural gas or water as approved by the Engineer. Test duration shall be in accordance with the following table, but in no case more than 24 hours for steel pipe or 8 hours for polyethylene pipe.

For polyethylene pipe, the maximum test duration shall be 8 hours including time to pressurize, time for initial expansion, time at test pressure, and time to depressurize the test section. If the test is not completed due to leakage, equipment failure, or for any other reason, depressurize the test section completely, and allow it to relax at least 8 hours before pressurizing the test section again.

Size	Test Time Hours per 1000'	Minimum Time
1"	1.0	-
2"	1.0	2.0
3"	2.0	3.0
4"	3.0	4.0
6"	4.0	4.0
8"	4.5	6.0
10"	9.0	8.0
12"	12.0	8.0
16"	24.0	8.0

Mains requiring a test duration greater than 12 hours shall have a recording gauge monitoring the test.

Qualified department employee shall monitor and certify the test, showing initial and final time and pressures, date, and signature. Records of all pipelines operating at more than 100 psi will be retained for the life of the pipe.

19.04 Gas Services Testing

All new or reinstated gas services installed on live mains shall be pressure tested individually and separate from the main or meter connection plumbing unless approved

by Utility Operations or Engineering. Before it is tapped, test shall include the riser, meter stop valve, and the attached service tee.

A repaired service must be pressure tested from the repair to the meter stop valve. Final joint at repair coupling may be soap tested.

Test gauge shall be installed on the outlet side of the opened meter stop valve.

All service lines shall be tested with air and accepted if it maintains 100 psig for one-half (1/2) hour. Accepted service can then be tapped to the main, the tap or punch tee cap soap tested, the service purged, and a threaded plug installed on the meter stop valve.

Service lines may be installed and tapped on PE mains not in service. Both main and service shall be tested to pressure and duration required for the main.

Mains not in service and to which services are to be connected and tested shall contain air pressure between 30 psi and 50 psi to enable a soap test of the tap or punch tee cap. Purging shall immediately follow or be done simultaneously with the main purging.

Each completed and purged service will have a pin type lock installed immediately by Department personnel. Lock will be removed only by Department personnel or authorized personnel.

Qualified department employee or Utility Operations Leadworker shall monitor and certify the test, showing initial and final time and pressures, date, and signature.

19.05 Test Records

All pressure test records shall be kept for the life of the facility +5 years. Document any leaks, failures, and their disposition, and any significant elevation variations on the applicable forms.

Table of Contents

20.01 General 1

20.02 Purging High Pressure Gas Mains and Services 1

20.03 Transmission Line 1

20.04 Distribution System 1

20.04.01 Purging 2" or larger Pipes. 1
20.04.02 Purging 1" or 1/2" Gas Services 2

Table 20-1: Purge Venting 2

20.01 General

This section of the Standard Specifications establishes requirements and policies for purging HP gas pipelines, transmission mains and services.

20.02 Purging High Pressure Gas Mains and Services, gas to air and air to gas.

Safety and Preventing Accidental Ignition

A. Whether purging the line from air to gas or from gas to air, the purging material shall be introduced at a rate indicated in the purging table. If this rate cannot be achieved, then a slug of inert gas such as nitrogen must be introduced into the line before purging begins, to separate the gas and air.

B. Before purging begins, all sources of potential ignition must be removed from the area, and a fire extinguisher must be on site and visible.

C. Warning signs shall be posted where appropriate to caution or instruct others who are in or near the affected area.

20.03 Transmission Line

Refer to Section 13.03, Shutdown and Purging 10" Great Lakes Interconnect Transmission Line.

20.04 Distribution System

20.04.01 Purging 2" or larger Pipes.

A. Purging 2" and larger mains or services shall be by Department personnel or directed by a Department inspector. Purge stacks at exit end of pipe are required.

B. Entry and exit fittings and apparatus should not restrict flow velocity to less than 200 feet per minute through the purged pipe. The main shall not be purged through services with an EFV.

Table 20-1
Purge Venting

Pipe Size to be Purged	Volume (CFH) to obtain Vel of 200 FPM	*Max Length of ½" pipe if used to exit purge gas
2"	280	440'
3"	615	110'
4"	1060	35'
6"	2410	Engineer to Determine
8"	4325	Engineer to Determine
10"	6880	Engineer to Determine
12"	9825	Engineer to Determine
16"	15720	Engineer to Determine

*Based on 15 PSI min - inlet pressure

C. Stack shall be a grounded metal stack, a minimum of one size smaller than the line being purged. Stack shall extend at least 6' above grade and be directed upward but angled away from wall if at a building.

D. Person at purge location shall have visual or audio communication contact with person at control valve.

E. Purging air to gas should be continuous at each purge point until a gascope indicates at least 85% pure gas. Where possible, valved branches should be turned off until that branch is purged. Any connected services also purged consecutively and without delay. On a system with several purge locations not isolated by valves, the highest ends shall be purged first.

   Purging gas to air should be continuous until a mixture less then 10% LEL is measured at venting end.

20.04.02 Purging 1" or 1/2" Gas Services

Purging 1" or 1/2" gas services may be done by the Contractor without direct department supervision, gascope testing, or vent stack, except a vent stack to unconfined space is required if pipe end is below grade or inside of enclosed structure.

Table of Contents

21.01 General 1

21.02 Abandoning Transmission Lines and Gas Mains 1

21.03 Abandoning Services (Cut off at main) 1

21.04 Partially Abandoning Services (Cut off at service valve) 2

21.01 General

This section of the Standard Specifications establishes requirements and policies for abandoning existing gas pipelines and services.

21.02 Abandoning Transmission Lines and Gas Mains

Each pipeline abandoned in place must be physically disconnected from all sources of gas supply. Any main being abandoned which is 2" or larger and a length of 50 feet or longer shall be purged of gas following the procedures outlined in Section 20.02, Purging High Pressure Gas Mains & Services.

Purge shall continue until a mixture less than **10% LEL** is measured at vented end. Mains specified on the Plan to be abandoned shall be abandoned in place. The Contractor shall effect the cutoffs where the main is steel or plastic and has been depressurized and purged, if necessary.

The Department will provide labor and materials to seal any end still connected to a gas source using standard fuse or welded end caps or blind flanges.

Openings at ends which have been disconnected from any gas source shall be sealed either by Department or Contractor as follows:

2"+ Steel Mains	by weld-on plate, coupling and end cap, blind flange, injected sealant foam or concrete.
2"+ Plastic Mains	by fused end cap
Cast Iron Mains pipe plug, (previously abandoned)	by M.J. cap, M.J. coupling & plug, tamp on plastic injected sealant foam or concrete.

When removing sections of the previously abandoned low-pressure cast iron gas system it is necessary to provide at least a 1" Type K copper or PE jumper drain to allow the abandoned system to continue draining freely. Exemptions to this requirement will only be made by the Engineer in areas where the old abandoned low-pressure gas system is on level terrain.

21.03 Abandoning Services (Cut off at main)

Any abandoned service must be disconnected from gas source and depressurized. Purging of gas is required if service is 1" or larger and longer than 50 feet. When purging a service, the same procedure as purging abandoned main (Section 21.02) shall be followed.

A. P.E. Services (1/2" & 1" with P.E. Service Tees). Turn down self-tap cutter, soap and reinstall cap, cut service and attach short capped 1/2" stub with mechanical fitting or fuse-on P.E. cap as close to service tee as practical.

B. 1/2" P.E. or 5/8" Service with steel tap tee. Turn down self-tap cutter in mini-tee, reinstall cap, remove extrube steel service, insert short capped ±" P.E. stub in compression fitting and retighten nut to seal. P.E. stub must have stiffener installed.

C. P.E. Services (2" & 3" with Tee or branch saddle off P.E. main). Squeeze off service and fuse on end cap as close to main tee as practical. If a P.E. Service valve is too close to main, then shut valve, install end cap just downstream, and do not replace box.

D. Steel Service (1-1/4", 1-1/2" & 2"). Connected to main with weld on No-Blo tee. Remove cap, insert rubber stopper using machine, cut off service, weld a sized steel slug in end, reinstall completion plug and cap.

E. Steel Service (2" & larger which have no tap valve or No-Blo tee). Stopple service as close to main as possible; weld on end cap.

21.04 Partially Abandoning Services (Cut off at service valve)

Steel Service (2" & larger which have tapping valve at main). Shut off service valve, install blind flange on valve, **do not** replace box. If valve is a plug type, it must be lubricated before burying. Record to remain in active service file and noted as "cut off at valve."

Table of Contents

22.01 General 1

22.02 General Requirements. 1

22.03 Valve Requirements for Gas Meter Connections 2

22.01 General

This section of the Standard Specifications establishes requirements and policies for the installation of service meter connections.

22.02 General Requirements

This work consists of plumbing in gas piping less than 2 inches in diameter above the outside meter stop valve, installing the regulator, meter, and inside stop valve. Plumbing shall conform to Section 2200, Uniform Mechanical Code, with Chapter 1346 MN Amendments, the National Fuel Line Code, as applicable, the Detail Drawings, and the following requirements.

General provisions for installing meters and regulators are contained in Section 30 and in the following provisions.

A. When relocating meters from inside to outside, buildings having 1 or 2 inside meters shall have the new meters installed outside. Buildings with 3 or more inside meters will have the new meters installed inside, unless otherwise specified.

B. Piping shall be extended from inside stop valve to existing gas piping, and piping shall be restored or removed, as necessary, where meters were removed.

C. Abandon any unused underground service piping in accordance with Section 21.

A schedule of connections will be provided.

The Department shall furnish the following materials to Contractor, who shall pick them up from 520 Garfield Avenue:

Service regulator, meter and meter bar or meter mounting bracket, test plugs, or relief devices, as may be required.

All other materials shall be furnished by the Contractor, including:

Gas pipe for plumbing shall be black iron or steel, conforming to Section 14.02.02. Fittings shall be threaded black iron or steel.

Pipe shall not be less than 1" between regulator and small meters whether single or duplex.

Inside Stop and other materials incidental for the installation.

Outside threads of all pipe and fittings shall be doped with "Rector Seal" or Teflon tape.

Prior to installing meters, the meter swivel threads shall be lubricated with "Permatex Anti-Seize" or a similar approved compound.

Pipe supports shall be installed as required to adequately support all piping.

All piping, fittings, valves, and brackets outside of the building shall be cleaned of oil, dirt, scale, and primed with Rust-Oleum Primer #678 or #769, Rustex or DeRusto. Color shall be gray. Spray painting is not permitted. Paint shall be brushed on after the pipes are wiped with a cloth wet with oil cutting solvent.

Removed piping shall be disposed of according to the wishes of the building owner.

All meter connections using 1-1/4" regulators or larger, regardless of service size, shall have test points installed on both sides of regulator. Test points shall be weld on 1/4" couplings complete with "Pete's Plugs".

Threaded nipples with 1/4" welded on test points and Pete's Plugs will be furnished by the Department at no charge.

22.03 Valve Requirements for Gas Meter Connections

A. Inside shutoffs. Each service entering a building must have a lever-operated valve at a convenient location and as close to the entry location as possible. Valves shall be ball type as specified in Department Standard Specifications Section 14.04.06 for 2" size and smaller. Approved lever handle plug type may be used for larger sizes.

B. Meter Stop Valves. Each meter shall have an independent shutoff valve capable of being locked in a closed position with a 1/2" pin type lock. Single or master meter stop (3/4" and 1") are specified in Section 14.04.04. Valves for multiple meter stops shall be as specified in Section 14.04.07, and be tamper-proof, lock-wing type, suitable for locking in a closed position.

Department personnel will immediately install a pin lock on each closed meter stop following installation, testing and purging of a new gas service. The pin lock shall be removed by Department personnel or Department-authorized person only when testing meter connection work and for light-up purposes.

Table of Contents

23.01 General 1

23.02 Installation of Distribution Regulator Stations 1

23.01 General

This section of the Standard Specifications establishes requirements and policies for the installation of steel gas distribution systems and a transmission line.

23.02 Installation of Distribution Regulator Stations

Distribution Regulator Stations shall be furnished and installed as a joint effort by the Contractor and the Department. This following schedule lists approved materials for regulator stations. Station will be furnished and installed by the Department with the Contractor providing excavation and restoration.

Station Component(If applicable)	**Material/Reference**
Underground Steel Piping and Fittings	14.03.01
Plastic Piping (if any)	14.03.02 & 14.03.03
Control Piping	Stainless Steel w/ Swagelok fittings
Connections to Mains	23.02 16.08
Underground Valves (except on CI)	14.04.01 or 14.04.02
Aboveground Valves	14.04.01 or 14.04.02
Control Valves	Brass Ball Valves
Gauge Point Connection	Pete's Plug
Relief Device (if required)	See Reg. Detail
Regulator Device	See Reg. Detail
Monitor Control (pilot)	See Reg. Detail
Strainer	14.05.07
Insulator (above grade) (below grade)	 14.06.03
Pipe Coating (below grade)	14.06.04
Prime and Paint (above grade)	14.06.05
Pressure Testing (above reg. valves)	Soap Test
Pressure Testing (below reg. valves)	Same as Mains

Stations to be furnished and installed by the Department shall require only excavation, backfill, surface restoration, and labor and equipment for lifting on site by the Contractor. The Contractor will be compensated for this in a unit item under Excavations Miscellaneous or Excavations for Regulator Station.

Stations shall be constructed at locations indicated on the Plan, according to these Specifications and the Detail Drawing.

Leakage testing on new mains, which also have regulator stations attached, shall be tested only up to the below-grade regulator shutoff valves or to temporary regulator

branch caps. Flanges or threads on regulator side of valves shall be soap tested by the Department when station is in operation.

Regulator Stations constructed on inplace mains shall have gas introduced into the station and all joints soap tested at operating pressure.

Table of Contents

23.01 General 1

23.02 Installation of Distribution Regulator Stations 1

23.01 General

This section of the Standard Specifications establishes requirements and policies for the installation of steel gas distribution systems and a transmission line.

23.02 Installation of Distribution Regulator Stations

Distribution Regulator Stations shall be furnished and installed as a joint effort by the Contractor and the Department. This following schedule lists approved materials for regulator stations. Station will be furnished and installed by the Department with the Contractor providing excavation and restoration.

Station Component(If applicable)	**Material/Reference**
Underground Steel Piping and Fittings	14.03.01
Plastic Piping (if any)	14.03.02 & 14.03.03
Control Piping	Stainless Steel w/ Swagelok fittings
Connections to Mains	23.02 16.08
Underground Valves (except on CI)	14.04.01 or 14.04.02
Aboveground Valves	14.04.01 or 14.04.02
Control Valves	Brass Ball Valves
Gauge Point Connection	Pete's Plug
Relief Device (if required)	See Reg. Detail
Regulator Device	See Reg. Detail
Monitor Control (pilot)	See Reg. Detail
Strainer	14.05.07
Insulator (above grade) (below grade)	 14.06.03
Pipe Coating (below grade)	14.06.04
Prime and Paint (above grade)	14.06.05
Pressure Testing (above reg. valves)	Soap Test
Pressure Testing (below reg. valves)	Same as Mains

Stations to be furnished and installed by the Department shall require only excavation, backfill, surface restoration, and labor and equipment for lifting on site by the Contractor. The Contractor will be compensated for this in a unit item under Excavations Miscellaneous or Excavations for Regulator Station.

Stations shall be constructed at locations indicated on the Plan, according to these Specifications and the Detail Drawing.

Leakage testing on new mains, which also have regulator stations attached, shall be tested only up to the below-grade regulator shutoff valves or to temporary regulator

branch caps. Flanges or threads on regulator side of valves shall be soap tested by the Department when station is in operation.

Regulator Stations constructed on inplace mains shall have gas introduced into the station and all joints soap tested at operating pressure.

Table of Contents

24.01 General 1

24.02 Installation of System Reliefs 1

24.01 General

This section of the Standard Specifications establishes requirements and policies for the installation of system reliefs.

24.02 Installation of System Reliefs

System reliefs are installed either as an integral part of a distribution regulator station or as an isolated appurtenance, detached and installed at a location remote from the regulator station. The former will be installed as part of regulator station according to this section.

Relief vents shall be designed and installed to reduce the accumulation of water, snow, or ice, and located where gas can be discharged into the atmosphere without undue hazard. New station construction shall follow plan detail. Refitted stations may follow vent detail in standard Detail Drawing G-31 or G-32 and pointed where the hazard of gas release is minimal, and away from the station inlet underground valve.

Department shall furnish materials identified in the Detail Drawing for the relief to the same extent as for regulator stations in this section.

Department will furnish and install all required materials except excavation, backfill and restoration, which shall be done by the Contractor and compensated for under a Proposal Item, Excavation Miscellaneous or Excavation for System Relief.

Leakage pressure testing of new mains shall be done up to shutoff valve below relief device. Joints above the relief shutoff valve shall be soap-tested under operating pressure.

Reliefs and new associated piping installed on in-place mains shall be soap tested under operating pressure.

Table of Contents

25.01 General 1

25.02 Anode Installation 1

25.03 Insulator Installation 1

25.04 Test Stations 1

25.05 Continuity Wires 2

25.06 Field Coating Application (Below Grade) 2

25.07 Field Coating Applications (Above Grade) 4

25.08 Surface Preparation 4

25.01 General

This section of the Standard Specifications establishes requirements and policies for the installation of cathodic protection materials.

25.02 Anode Installation

For the protection of steel mains, anodes shall be placed as shown in the Detail Drawing. The backfill immediately surrounding the anode must be saturated with a pail of water before finishing the backfill. Wires shall have slack and be hand backfilled.

25.03 Insulator Installation

A. Casing Insulator Installation. Casing insulators shall be installed between steel carrier pipes and steel casings. Insulators shall conform to Section 14.06.03. Insulators shall be spaced at intervals between 10 and 15 feet and not farther than 2 feet from the ends.

B. Pipe Support Insulator Installation.

Installation of Glas Mesh Type 180 or Type 240 Pipe Saddles
All Defective coating, loose paint, rust, and corrosion products to be removed under the proposed pipe saddle or casing insulator. Surface to be free of moisture, grease and oil. The surface may be painted or taped to match the color of the pipe prior to the installation of pipe saddle. For the pipe saddles type 180 or 240 must be attached to the pipe with seam sealer and all exposed edges to be beveled. This is to prevent moisture entrance into the saddle.

Installation of the Glas Mesh Type 220/240 Casing Insulator
The type 240 (larger of the two) shall be installed on the bottom of the pipe and the type 220 on top and overlapping the type 240. Both of these insulators must be installed with seam seal, all voids must be filled so that moisture can not enter either insulator.

25.04 Test Stations

Test Stations shall be installed at locations indicated on the Plans, according to the Standard Detail Drawing. Box shall be plastic, as specified in Section 14.06.02.

For installations in areas subject to vehicular traffic, where it is impractical to locate the box outside the pavement, the plastic box shall be set in the top section of a CI valve box. When installation is intended to be on poles or other structures, such will be noted on the Plans.

Test Stations located at valves shall have the test box placed adjacent to the valve box.

Each test lead wire must be connected to the pipeline so as to remain mechanically secure and electrically conductive. Each test lead wire must be attached to the pipeline so as to minimize stress concentration on the pipe. Each bared test lead wire and bared metallic area at point of connection to the pipeline must be coated with an electrical insulating material compatible with the pipe coating and the insulation on the wire. (See Detail Drawing G-18).

Before any new test lead is connected to the transmission line, the pressure in the line must be reduced such that it is below 20% SMYS on the line.

25.05 Continuity Wires

Whenever continuity cannot be assured when connecting steel gas mains or services with compression type couplings, continuity shall be maintained with #4 stranded copper bond wires coated for direct burial. Ends shall be cadwelded or thermit welded from pipe-to-pipe and pipe-to-coupling and the welds coated.

25.06 Field Coating Application (Below Grade)

Each external protective coating, whether conductive or insulating, applied for the purpose of external corrosion control must:

A. Be applied on a properly prepared surface;

B. Have sufficient adhesion to the metal surface to effectively resist underfilm migration of moisture;

C. Be sufficiently ductile to resist cracking;

D. Have sufficient strength to resist damage due to handling and soil stress; and,

E. Have properties compatible with any supplemental cathodic protection.

Each external protective coating which is an electrically insulating type must also have low moisture absorption and high electrical resistance.

If coating pipe is installed by boring, driving, or other similar method, precautions must be taken to minimize damage to the coating during installation.

Coating materials specified in Section 14.06 shall be applied to all uncoated portions of pipe, fittings, valves, including bolts, couplings, damaged coatings, and other related steel components of the gas system. Casing pipes do not require coatings.

Field coating for underground pipeline shall be applied as follows:

TC Mastic or wax tape by Trenton or approved equal shall be applied to mechanical bolt-type couplings, flanges and flanged fittings, no-blo tees, tapping saddles, and other irregular shaped fittings.

All valves shall be field coated regardless of existing factory applied coatings.

Cold tapes -- Weld joints, weld fittings, and coating repair.

Optional hot-type applications shall be as follows:

Shrink Sleeves - weld joints and boltless compression couplings

Tapecoat 20 - weld joints, weld fittings, and coating repair

Directional bore pipe shrink sleeves, Dirax by Raychem

Coating shall be applied to dry, clean and primed surfaces.

Primer must be the companion to the manufacturer's coating.

Tape shall overlap 1/2 inch for spiral method of wrapping and 1 inch for the cigarette method.

Holidays over two square inches shall be repaired by wrapping tape completely around the pipe.

Holidays less than two square inches in the epoxy pipe coating may be repaired using P hot melt patch sticks, Scotchkote 206-P or equivalent.

25.07 Field Coating Applications (Above Grade)

General Applications	System			
	Top Coat	Primer	Prep.	Applic.
A. New Meter Connections, New outdoor fuel pipe	None Required	Rust-oleum #678 or 769 14.06.05A	SSPC-SP1 & SSPC-SP2	Brush
B. Regulator Stations	Pittsburg 2 part Urethane Gray	Dupont Vari Prime-Green (acid base)	SSPC-SP1 & SSPC-SP2	Brush or Spray
C. Meter Set Piping Recoating Program	Polymide Epoxy 14.06.05B 5-8 Mills	None Required	SSPC-SP2	Brush
D. New Uncoated gas mains, fittings, on creek crossings, bridges, etc.	Acrylic-Urethane Enamel 14.06.05C	Inorganic zinc-rich primer 3 Mills	SSPC-SP10 Or NACE #2	Spray or Brush
E. Previously painted mains, fittings on creek crossings, bridges, etc.	Acrylic-Urethane Enamel 14.06.05C	Organic zinc-rich primer 3 Mills	SSPC-SP6 Or NACE #3	Spray or Brush
F. Previous coal tar, 3M or X-TRU, coated mains on creek crossings, bridges, etc.	Tape coating & Aluminizd Mastic 14.06.05D	TC Omni Prime None Required for Mastic or Wax Tape	SSPC-PC7 Or NACE #4	Machine or hand, mastic is brushed

25.08 Surface Preparation

Painting or coating systems will require one of the following surface preparations. Specs referred to are Steel Structures Painting Manual.

SSPC-SP1-Solvent cleaning. Oil to be removed with solvent and brush or wipe cloth.

SSPC-SP2-Hand tool cleaning with wire brush as necessary to remove loose paint, loose rust, dirt, and pipe tape.

SSPC-SP5 or NACE-1- White Metal Blast Cleaning

Completely remove all mill scale, rust, rust scale, previous coating, etc., leaving the surface a uniform gray-white color.

SSPC-SP10 or NACE-2- Near White Blast Cleaning
Remove all blast scale, mill scale, previous coating, etc., leaving only light stains from rust, mill scale, and small specks of previous coating. At least 95% of each square inch of surface area is to be free of all visible residues, and the remainder shall be limited to slight coloration.

SSPC-SP6 or NACE-3- Commercial Grade Blast Cleaning
Completely remove all dirt, rust scale, foreign matter, and previous coating, etc., leaving only shadows and/or streaks caused by rust stain and mill scale oxides. At least 66% of each square inch of surface area is to be free of all visible residues, except slight discoloration.

SSPC-SP7 or NACE-4- Brush-Off Blast Cleaning
Remove rust scale, loose mill scale, loose rust, and loose coatings, leaving tightly bonded mill scale, rust, and previous coatings. This is an ideal method for removing oxides and/or loose and peeling coatings from galvanized metal. Results are comparable to those achieved through chipping, scraping, and wire brushing. In all cases of surface preparation, the surface must be primed within 6-8 hours of abrasive blasting.

Table of Contents

26.01 Method of Measurement 1

26.01.01 Gas Pipe. 1
26.01.02 Service Meter Connections. 1
26.01.03 Excavation for Cutoffs, Regulator Station, Relief & Miscellaneous. 2

26.02 Basis of Payment 2

26.01 Method of Measurement

All items will be measured separately according to design designation as indicated in the Pay Item name and as may be detailed and defined in the Plans or Special Provisions. Pipe will generally be designated by size and kind or type. Complete-in-Place items shall include all component parts thereof as described or required to complete the unit, but excluding any excesses covered by separate Pay Item.

26.01.01 Gas Pipe.
Gas main pipe of each kind and size will be measured separately by the overall length along the center of the pipeline from the beginning of each installation and without regard to intervening valves, casings, couplings, transitions of other material or sizes, or minor line deviations caused by slack in laying coiled pipe. Terminal points of measure will be to the physical ends of the pipeline, to the centerline of in-place connecting pipelines. Bend and ties shall be included and measured from intersecting centerlines. Reducers, where transition is not abrupt, shall be measured as the larger size pipe.

Gas service pipe will be measured as the ground distance from the center of tapping tee, (or gas main for large services) to the point where the riser comes out of the ground.

All costs of installing gas main placed by horizontal directional drilling between the locations shown on the plans or as directed by the Engineer; including gas main pipe, appurtenances, locating wire, and testing; shall be paid for at the contract unit price per linear foot for Install (diameter, PE or steel) Gas Main by Horizontal Directional Drill. If the Contractor chooses at his option to horizontally directional drill gas main not shown on the plans or designated by the Engineer for horizontally directional drilling, payment shall be made at the contract unit price per linear foot for Install (diameter, PE or steel) Gas Main.

26.01.02 Service Meter Connections.

Measurement shall be made on the basis of one (1) connection per meter, except when connection is to multiple meters which are not replaced or relocated, in which case measurement will be one connection regardless of the number of meters. Multiple meters, which are replaced or relocated, will be measured as one (1) connection per meter.

Multiple meters all less than 400, if replaced or relocated, and requiring a B-31 regulator or larger, shall be paid for as one connection, greater than or equal to 400 for the first meter and less than 400 for the rest.

Removed meters which are piped through or capped off shall be paid for at one-half (1/2) the respective meter connection bid price.

Meter Connections will be paid for by size accordance to the meter rated capacity as follows:

Meter Connections (less than 400 CFH)
Meter Connections (400 CFH and larger)

26.01.03 Excavation for Cutoffs, Regulator Station, Relief & Miscellaneous.

Excavations designated on the Plans and as a unit item in the proposal on a per each basis will be measured separately for each such excavation completed, including backfill and required surface restoration. This item shall be measured for payment only to the extent that the excavation does not lie in a location already requiring excavation for construction of other items for which excavation is included.

26.02 Basis of Payment

Payments for gas mains and related facilities will only be made under the items in the proposal. Cost of other work necessary to complete in place the improvements required on the Plans and in the Contract Documents will be considered incidental and the costs included in the unit items unless it qualifies as extra work and is properly authorized.

Payment for gas main and gas services shall be compensated in full for all costs of furnishing and installing the pipe complete in place as specified, with the exception of rock excavation, granular borrow material not specified as a Laying Condition, and casing pipes where separate payment is established, but including all costs of pipeline installation not exempt by a pay item or authorized extra. Incidental pipeline cost shall include, but not be limited to, furnishing and installing all required materials for the pipeline (unless specified to be furnished or installed by the Department) including valves, couplings, insulators, locating wires, continuity wires, test stations, anodes, field coatings, joining, fittings, testing, excavation, backfill, surface restoration as may be required. Cost of services shall include the connection to main, riser, meter stop, plug, beside the same applicable incidentals required for gas main.

Payment for service meter connections shall be on a unit price basis and shall include full compensation for all materials, labor, equipment necessary to install the regulator, meter, inside stop valve and interconnecting plumbing from the meter stop valve to the inside stop valve or existing plumbing where such plumbing exists. Meters requiring removal only will be paid for at one-half the bid price for meter connections.

Payment for excavations for cutoffs, regulator stations, system reliefs or miscellaneous shall include all labor and materials not specifically furnished or installed by the Department.

Payment for items which are eligible for compensation will generally be made on the basis of the following schedule. Consult the proposal for actual payment items for this project.

Item Name	Unit
Gas Main (Size and Type)	Linear Foot
Gas Service (Size and Type)	Linear Foot
Service Meter Connection (Size)	Each
Excavation for (Cutoffs, Regulator Station, Reliefs, Miscellaneous)	Each
Valve Boxes	Each
Reconnect Services	Each

Table of Contents

27.01 General 1

27.02 Qualification Procedure 1

27.03 Welding Qualifications 1

27.03.01 Butt Welding Procedure Specifications 1
27.03.02 Procedure Qualification Record 5
27.03.03 Fillet Welding Procedure Specifications 6
27.03.04 Procedure Qualification Record 10
27.03.05 Coupon Test Report 11

27.04 Maintaining Welding Qualification 12

27.05 Records 12

Figure 27-1: Butt Welding Procedure Qualification Record 5

Figure 27-2: Fillet Welding Procedure Qualification Record 10

Figure 27-3: Coupon Test Report 11

27.01 General

Welding of joints and connections for gas pipelines shall only be done by welders qualified in accordance with the requirements of this section.

Upon request by the inspector or at any time before beginning production welding, a contractor must submit documentation of welders' qualifications on a form similar to the API Welder Qualification, Coupon Test Report as shown in Figure 27-3. Documentation may be submitted to Duluth Public Works and Utilities Department, Engineering Division, 411 West 1st Street, Duluth.

Department welders must be qualified in the same manner as contract welders.

27.02 Qualification Procedure

A. The Department has established specifications for Welding Procedures #DPWU-1 (formerly #DWG-3)for single V butt welds and #DPWU-2 for fillet welds shown in Section 27.03(C) along with the recorded qualifying procedures shown in Figures 27-1 and 27-2. Welders Qualification Tests must be set up and performed within the parameters of this specification which is established in Section 27.03 (A & C) for butt welds and for fillet welds.

B. A welder must be qualified by an independent testing company, the name of which is to be indicated on the qualifying document.

C. Qualifying document must be the same or similar to the form shown in Figure 27-3, the API Welder Qualification Coupon Test Report.

D. Testing company shall evaluate test welds in accordance with API 1104, 19th Edition, Section 6 or Section 9 for butt welds and fillet welds if fillet welding is required on the specific project they are working on. Department welders will perform the Multiple Qualification test as outlined in API 1104, 19th Edition, Section 6.3. If contract welders need to qualify on fillet welds, they must be qualified in the same manner.

27.03 Welding Qualifications

27.03.01 Butt Welding Procedure Specifications

SMAW, E-6010 & E8010G ELECTRODES
ASTM A53, API GRADE B THROUGH X-60
ALL PIPE DIAMETERS, WALL THICKNESSES $\leq$ 3/4"

A. Reference

API Standard 1104, 19th Edition
City of Duluth Procedure #DPWU-1 (formerly DWG-3)

B. Process

Welding shall utilize the Shielded Metal Arc Welding (S.M.A.W.) process.

C. Parent Metals

Metals welded according to this standard shall cover ASTM A53, API Grade B through X-60

D. Diameter and Wall Thickness:
This procedure shall apply to material having any diameter or wall thickness ≤3/4"

E. Joint Design

The joint ends shall be beveled to an angle of 30°, + 5°,-0 °, with a root face of 1\16", ± 1\32". Bevels shall form a "V" groove with an included angle of 60°. The root opening shall be 1\16", ±1\32".

F. Filler Metal

The filler material shall conform to AWS A5.1, E-6010, Group F-3 (ASME) Weld Analysis A-1 for the first pass (root) and AWS A5.5, E8010-G, Group F-3 (ASME) Weld Analysis A-1 for subsequent passes (hot pass, filler and cap)

G. Size of Electrodes and Number of Beads

Wall Thickness (inches)	Stringer bead E-6010	Hot Pass E-8010G	Fill and cap E-8010G
< 0.188	3/32"	3/32"	1/8"
.188 - 0.250	1/8"	1/8" - 5/32"	1/8" - 5/32"
> 0.250	5/32"	5/32" - 3/16"	3/16"

The minimum number of passes is dependent on wall thickness but shall not be less than 3 passes with no pass deposited thicker than 1/8".

H. Electrical Characteristics

The welding current shall be D.C. current, Reverse Polarity (electrode positive)

Electrode	Rod diam.	Amperage	Voltage
E-6010	3/32"	60 - 100	20 - 26
E-6010	1/8"	75 - 130	20 - 27
E-6010	5/32"	90 - 170	20 - 27
E-8010G	1/8"	75 - 130	20 - 27
E-8010G	5/32"	90 - 170	24 - 27
E-8010G	3/16"	140 - 190	24 - 27

I. Direction of Welding

Welding shall progress down ward from top or any point on the side of the pipe to bottom center.

J. Speed of Travel

The speed of travel should be within the range of 3 - 14 inches per minute.

K. Number of Welders

When the nominal pipe diameter is less than 16", one welder may be used to run the stringer Bead (root bead). When the nominal pipe diameter is 16" or greater, two welders will be required to run the stringer bead and hot pass.

L. Time Lapse Between Passes

The second pass (hot pass) shall follow the stringer bead (root bead) within five minutes, except when unavoidable circumstances prevail which make this requirement impractical. A minimum of 3 passes shall be completed before the end of the day. Any weld that is not finished the day it is started shall be finished the next workday.

M. Type of Line-up Clamp

Fabrication, Maintenance, and Tie-In welding: External line-up clamps may be used on all sizes of welds.

N. Removal of Line-up Clamp

On 16" or larger diameter pipe, the line-up clamp shall remain in place until 100% of stringer bead (root bead) is completed. The department may reduce said percentage if, in its sole judgment, acceptable welds can be produced at that reduced percentage. However, the department retains the right to require the contractor to return to 100% if the welding quality is not acceptable. When the pipe diameter is less than 16", the line-up clamp may be removed upon completion of tack welds (minimum of 50% of total joint) adequate to prevent the loss of joint spacing, the development of high low, or the formation of cracks in the tack welds or stringer bead. Under no circumstances shall the line-up clamp be removed while welding is in progress or when metal temperature is above 400 °.

O. Cleaning

All rust, dirt, and foreign matter shall be removed from the bevel surface before welding is started. The bevel surface includes all areas in immediate proximity to the pipe end on both the I.D. and O.D. Slag shall be removed from the surface before the next bead is applied. Power tools may be used. The finished weld and immediately adjacent pipe must be cleaned of all flux, smoke debris and weld splatter. All welds will be visually inspected to ensure compliance with the qualifying welding procedure.

P. Preheat

Preheat shall be required when the ambient or metal surface temperature is below 40 ° for all pipe grades. The minimum preheat temperature is 200 ° to be applied to an area no less than 3" either side of the joint. If moisture is present on the parent metal, it shall be driven off by preheating to temperature at which it will not reform during the welding operation.

27.03.02 Procedure Qualification Record: Figure 27-1

API STANDARD 1104

Reference API Standard 1104, 18th edition	
PROCEDURE SPECIFICATION NO. DPWJ-1 Formerly DWG-3	
For Shielded Metal Arc Welding of API 5L Pipe and Fittings	
Process: SMAW	
Material: X-60	
Diameter and wall thickness: 20" X .626"	
Joint design: Single V Groove (Butt)	
Filler metal and no. of beads: 6010 + (Root)(1)(Group 1) 8010G (Hot pass and fill)(10)(Group 2)	
Electrical or flame characteristics: DC/RP	
Position: 6G	
Direction of welding: Downhill	
No. of welders: 2	
Time lapse between passes: 5 minute maximum between root and hot pass	
Type and removal of lineup clamp: External (removed after 50% of bead was completed)	
Cleaning and/or grinding: Grind as needed, use of power grinder and wire brush	
Preheat/stress relief: None	
Shielding gas and flow rate: NA	
Shielding flux: N/A	
Speed of travel: 4-12" per min	
Plasma gas composition: N/A	Plasma gas flow rate: N/A
Plasma gas office size: N/A	
Stretchers and tabulations attacked: N/A	
Tested: 8/13/01 Tuttle Hooks Testing	Welder: John Anderson/Roger Wheeler
Approved: 9/04/01 Larry L. Wenner	Welding Supervisor:
Adopted:	Chief Engineer: 9/04/01 David J. Pausch

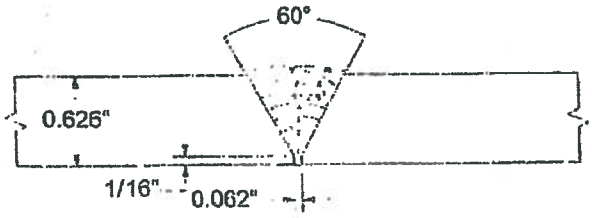

ELECTRODE SIZE AND NUMBER OF BEADS

Bead Number	Electrode Size and Type	Voltage	Amperage and Polarity	Speed
1	6010+1/8" Lincoln	20-27	80-140	4-12" per minute
2	8010G 5/22" Lincoln	24-27	90-170	4-12" per minute
3	8010G 3/16" Lincoln	24-27	90-170	4-12" per minute
4-10	8010G 3/16" Lincoln	24-27	90-170	4-12" per minute

27.03.03 Fillet Welding Procedure Specifications

SMAW, E-6010 & E8010G ELECTRODES
ASTM A53, API GRADE B THROUGH X-60
ALL

PIPE DIAMETERS, WALL THICKNESSES ≤ 3/4"

A. Reference

API Standard 1104, 19th Edition
City of Duluth Procedure #DPWU-2

B. Process

Welding shall utilize the Shielded Metal Arc Welding (S.M.A.W.) process.

C. Parent Metals

Metals welded according to this standard shall cover ASTM A53, API Grade B through X-60

D. Diameter and Wall Thickness

This procedure shall apply to material having any diameter or wall thickness ≤3/4"

E. Joint Design

Branch Connections
Branch ends shall be beveled to an angle of 45°, +5°/-0°, with a root face of 1\16", ±1\32". The root opening shall be 1/16"±1\32".

Sleeves
Side seams shall be beveled to an angle of 30° +5°,-0° with a root face of 1\16", ±1\32". The end preparation shall be with as little space between the sleeve and the pipe as possible.

F. Filler Metal

The filler material shall conform to AWS A5.1, E-6010, Group F-3 (ASME) Weld Analysis A-1 for the first pass (root) and AWS A5.5, E8010-G, Group F-3 (ASME) Weld Analysis A-1 for subsequent passes (hot pass, filler and cap).

G. Size of Electrodes and Number of Beads

Wall Thickness (Inches)	Stringer bead E-6010	Hot Pass E-8010G	Fill and cap E-8010G
< 0.188	3/32"	3/32"	1/8"
0.188-0.250	1/8"	1/8" - 5/32"	1/8" - 5/32"
> 0.250	5/32"	5/32" - 3/16"	3/16"

The minimum number of passes is dependent on wall thickness but shall not be less than 3 passes with no pass deposited thicker than 1/8". If welding on pressurized pipelines, the maximum electrode size shall be 1/8".

H. Electrical Characteristics

The welding current shall be D.C. current, Reverse Polarity (electrode positive).

Electrode	Rod Diameter	Amperage	Voltage
E-6010	3/32"	75 - 110	20 - 25
E-6010	1/8"	90 - 135	23 - 27
E-6010	5/32"	120 - 160	24 - 28
E-8010G	1/8"	90 - 135	23 - 27
E-8010G	5/32"	120 - 160	24 - 28
E-8010G	3/16"	130 - 175	25 - 29

I. Direction of Welding

Welding shall progress down ward from top or any point on the side of the pipe to bottom center.

J. Speed of Travel

The speed of travel should be within the range of 3 - 14 inches per minute.

K. Number of Welders

When the nominal pipe diameter is less than 16", one welder may be used to run the stringer Bead (root bead). When the nominal pipe diameter is 16" or greater, two welders will be required to run the stringer bead and hot pass.

L. Time Lapse Between Passes

The second pass (hot pass) shall follow the stringer bead (root bead) within five minutes, except when unavoidable circumstances prevail which make this requirement impractical. A minimum of 3 passes shall be completed before the end of the day. Any weld that is not finished the day it is started shall be finished the next work day.

M. Type of Line-up Clamp

Branch Connections

Spacing tools and manual holding during tacking off is acceptable if correct stringer bead space and proper alignment is maintained. If this is not possible, then mechanical holding devices shall be required.

Sleeve or Patch

Chains, clamps, hydraulic jacks or other similar mechanical holding devices shall be used to hold the sleeve or patch in intimate contact with the pipe before welding starts.

N. Removal of Line-up Clamp

On 16" or larger diameter pipe, the line-up clamp shall remain in place until 100% of stringer bead (root bead) is completed. The department may reduce said percentage if, in its sole judgment, acceptable welds can be produced at that reduced percentage. However, the department retains the right to require the contractor to return to 100% if the welding quality is not acceptable. When the pipe diameter is less than 16", the line-up clamp may be removed upon completion of tack welds adequate to prevent the loss of joint spacing, the development of high low, or the formation of cracks in the tack welds or stringer bead. Under no circumstances shall the line-up clamp be removed while welding is in progress or when metal temperature is above 400°.

O. Cleaning

All rust, dirt, and foreign matter shall be removed from the bevel surface before welding is started. The bevel surface includes all areas in immediate proximity to the pipe end on both the I.D. and O.D. Slag shall be removed from the surface before the next bead is applied. Power tools may be used. The finished weld and immediately adjacent pipe must be cleaned of all flux, smoke debris and weld splatter.

Q. Preheat

Preheat shall be required when the ambient or metal surface temperature is below 40° for all pipe grades. The minimum preheat temperature is 200° to be applied to an area no less than 3" either side of the joint. If moisture is present on the parent metal, it shall be driven off by preheating to a temperature at which it will not reform during the welding operation.

27.03.04 Procedure Qualification Record: Figure 27-2

API STANDARD 1104

Reference: API Standard 1104, 5.2	
PROCEDURE SPECIFICATION NO. DPWU-2	
For shielded metal arc welding. Welding of API 5L. Pipe and fittings	
Process: SMAW	
Material: X-52	
Diameter and wall thickness: 12.75" O.D. X .250"	
Joint design: Branch connection	
Filler metal and no. of beads: 6010 + (root)(1)(Group1) 8010G (Hot pass and fill)(5)(Group 2)	
Electrical or flame characteristics: DC/RP	
Position: Run (horizontal) Branch (down)	
Direction of welding: Downhill	
No. of welders: 1	
Time lapse between passes: 5 minute maximum between root and hot pass.	
Type and removal of lineup clamp: Manual or mechanical	
Cleaning and/or grinding: Clean and grind as needed	
Preheat/stress relief: N/A	
Shielding gas and flow rate: N/A	
Shielding flux: N/A	
Speed of travel: 4" to 12" per minute	
Plasma gas composition: N/A	Plasma gas flow rate: N/A
Plasma gas office size: N/A	
Stretches and tabulations attached: N/A	
Tested: 3-27-02 Twin Ports Testing	Welder: Pat Walsh
Approved:	Welding supervisor:
Adopted:	Chief engineer: David J. Pusak

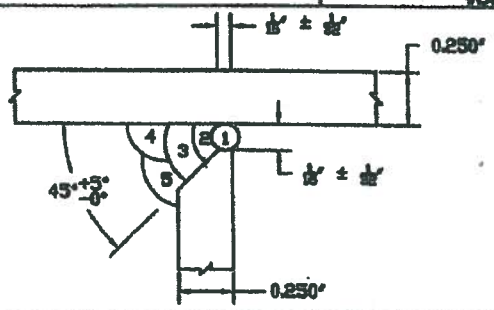

ELECTRODE SIZE AND NUMBER OF BEADS

Bead Number	Electrode Size and Type	Voltage	Amperage and Polarity	Speed
1	6010+/18" Lincoln	20-27	80-140	4-12" per minute
2	8010G-5/32" Lincoln	24-27	90-170	4-12" per minute
3	8010G-3/16" Lincoln	24-27	90-170	4-12" per minute
4 to 5	8010G-3/16" Lincoln	24-27	90-170	4-12" per minute

27.03.05 Coupon Test Report: Figure 27-3

API WELDER QUALIFICATION

COUPON TEST REPORT	
Date: 8-13-01	Test No: DPWU-1 formerly DWG-3
Location: City of Duluth Weld Shop – Garfield Ave. – Duluth, MN	
State: MN	Weld Position: Fixed – 6G
Welder: Pat Walsh/Brian Packingham	Mark:
Welding time: 1 hour	Time of day: 11:00 am
Mean temperature: 72°F	Wind break used: Indoors
Weather conditions: Sunny	
Voltage: 20-27	Amperage: 80-140
Welding machine type: Lincoln	Welding machine size: 200 amp
Filler Metal: 6010 (root) (Group 1) 8010 (hot pass and fill) (Group 2)	
Reinforcement size: 1/16"	
Pipe type and grade: X52	
Wall thickness: 0.312"	Outside diameter: 16"
Direction of Weld: Vertical – downhill	

DESTRUCTIVE TESTS

	Dimensions			Tensile Strength				
Spec #	Thick	Width	Area	Max Load	Ultimate (PSI)	Break	Bend	Nick Break
PW 1T	0.312	0.885	0.276		66589	Pipe		
PW 2T	0.312	0.881	0.275		68773	Pipe		
PW 1B	0.311	1.000	0.311		72433	Pipe		
PW 2B	0.309	0.868	0.268		70914	Pipe		
BP 1T	0.310	0.868	0.269		70586	Pipe		
BP 2T	0.312	0.874	0.273		72458	Pipe		
BP 1B	0.310	0.927	0.287		68774	Pipe		
BP 2B	0.311	0.880	0.274		69719	Pipe		
PW 1T	0.312	1.000	0.312				F-Pass	
PW 2T	0.312	1.000	0.312				R-Pass	
PW 1B	0.312	1.000	0.312				F-Pass	
PW 2B	0.312	1.000	0.312				R-Pass	
BP 1T	0.312	1.000	0.312				F-Pass	
BP 2T	0.312	1.000	0.312				R-Pass	
BP 1B	0.312	1.000	0.312				F-Pass	
BP 2B	0.312	1.000	0.312				R-Pass	
PW 1T	0.312	1.000	0.312					Pass
PW 2T	0.312	1.000	0.312					Pass
PW 1B	0.312	1.000	0.312					Pass
PW 2B	0.312	1.000	0.312					Pass
BP 1T	0.312	1.000	0.312					Pass
BP 2T	0.312	1.000	0.312					Pass
BP 1B	0.312	1.000	0.312					Pass
BP 2B	0.312	1.000	0.312					Pass

TESTED BY: Twin Ports Testing, Inc.	DATE: 8-13-01
APPROVED BY: Larry L. Warner	DATE: 9-04-01
WELDING SUPERVISOR:	DATE:
WELDER: B. Packingham	DATE: 8-15-01
Pat Walsh	8-15-01

27.04 Maintaining Welding Qualification

A welder can maintain qualification for butt welds if during the previous 6 months at least one weld has been tested and found acceptable under API Standard 1104, 19th Edition.

A welder can maintain qualification for fillet welds if during the previous 6 months at least one weld has been tested and found acceptable under API Standard 1104, 19th Edition.

27.05 Records

The Safety and Training Officer or his/her designee will keep qualifying documents for Department Welders and a copy of requalifying record.

Qualifying documents submitted for contract welders will be filed in job file for that particular contract and kept for the life of the pipeline.

Table of Contents

28.01 Qualification Tests 1

28.02 Identification Cards 1

28.03 Qualification Records 1

28.04 Qualification of Inspectors (192.287) 2

28.05 Fusion Qualification Procedure 2

28.05.01 General 2
28.05.02 Part 1 – Written Test 2
28.05.03 Part II – Joint Fabrication Test 2

28.06 Heat Fusion Test Requirements 3

28.07 Electrofusion Qualification Requirements (192.285) 4

28.08 Mechanical Qualification Requirements 4

28.09 Requalification Requirements 4

Figure 28-1: Fabricated Assembly for PE Fusion Qualification Test Part III 4

28.01 Qualification Tests

A. Qualification tests are used to determine the ability of those tested to produce sound joints with the equipment, materials, and procedures that are used in the field. It should be realized that the test is conducted under controlled conditions.

   Successful passage of the test does not guarantee that a person will make sound joints under all field conditions.

B. The qualification test shall be successfully completed by each joiner employed by the Department or by an employee of a contractor before being permitted to make joints on the Department's gas plastic P.E. system.

C. Joiners may be qualified in one or more of the following categories:

Fusion	Socket Saddle Butt Electrofusion
Mechanical (Dept. only)	Lyco-Fit Chicago Fitting Continental Con-stab

28.02 Identification Cards

Qualified contractor fusors must carry on their person a Department-issued certification card which will be issued by the Department upon passage of the qualification test. This card must be presented on request. The card will indicate if fusor is qualified for socket, saddle, butt fusion or electrofusion. The inspector shall verify by office records that the fusor's qualifications are current. In addition each fusor will have available the standard specification for fusion.

28.03 Qualification Records

The Safety & Training Officer or his/her designee shall maintain a record of each test and shall maintain a list of currently qualified persons in each category. Persons who do not requalify during the required interval shall be deleted from the current list. The list shall contain both Department and Contractor joiners.

Old lists and test records shall be kept for seven years.

28.04 Qualification of Inspectors (192.287)

Each person responsible for inspecting fusion joining must be qualified by training or experience in evaluating whether joints made according to the procedure in this manual are acceptable.

Each inspector will be qualified, in addition to experience or other training, by passage of Part I of the qualification test which is the written portion. Part II is the Joint Fabrication portion of the test. Persons who qualify on both Part I and Part II are also considered qualified to inspect provided that their certificate has not expired.

28.05 Fusion Qualification Procedure

28.05.01 General

Qualification testing is conducted in two parts. Part I must be passed before proceeding to Part II.

28.05.02 Part 1 – Written Test

This test may or may not be preceded by classroom training. The test shall consist of questions pertinent and critical to making satisfactory joints. Questions may be derived from information provided in Section 16.07 of the Standard Specifications titled "Joining Pipe and Fittings". Reference material will not be permitted to be used during test and measures will be taken by the test monitor to assure same.

An overall score of 75% is required to pass the written test.

28.05.03 Part II – Joint Fabrication Test

Fabrication of various fusion joints will be done by the applicant, in the presence of a Department-qualified fusor at the Department Utility Operations Division, 520 Garfield Avenue.

Plastic pipe and fittings for socket, saddle and butt will be furnished by Department.

Tools and irons for socket, saddle and butt fusion joining must be provided by the applicant.

Tools, equipment, piping, and fittings for electrofusion must be provided by the applicant.

A fee shall be charged to recover costs of the testing.

Applicant may not refer to manual or written notes during Joint Fabrication Test.

Completed Assembly must be as it appears in the detail shown in Figure 28-1.

28.06 Heat Fusion Qualification Requirements

A. The fabricated assembly completed by the applicant shall be subjected to visual inspection for comparison with standard pipe manufacturer photos for acceptable and not acceptable joints.

B. The following defects will result in a failed test:

1. Failure to follow procedures
2. Visual defect
3. Failure during destructive test

C. Tests

1. Socket (2" and 1/2") Visual and Destructive

The applicant must complete a socket type joint for testing by the Department. The test will include cutting three strips, 1" wide and 6" along the pipe through the joint. The test will include bending the strips 180° over and checking for disbondment.

2. Service Punch Tee (2" x 1/2") Visual and Destructive

The applicant must complete a service punch tee type joint, including tapping the service tee prior to testing by the Department. The test will include slipping an 1-1/2" steel pipe over the top of the service punch tee (cap must be removed) and bending the tee to 45° in all directions to attempt to disbond service tee from main.

The punch tee will also be sawed in half at 90° to the main line to check for overmelt at the 1/2" pipe connection to the service punch tee which may cause orificing at the connection.

3. Butt (2") Visual and Destructive

The applicant must complete a butt type joint for testing by the Department. The test will include cutting three strips, 1" wide and 6" along the pipe through the joint. The test will include bending the strips 180° over and checking for disbondment.

The butt joint test, if done alone, may be done on 2", 3", 6"or 8" pipe.

Figure 28-1
Fabricated Assembly for P.E. Fusion Qualification Test Part III

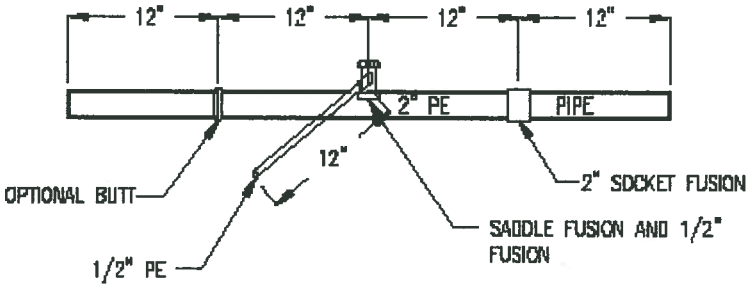

28.07 Electrofusion Qualification Requirements (192.285)

Applicants qualifying for electrofusion shall be certified according to Section 28.05. In addition, the applicant shall make an electrofuse coupling joint and/or a sidewall/saddle including tapping a fusion service tee. The applicant must be tested for each type of work that they will be performing for the utility.

The test will include a visual inspection and cutting three test strips, 1" wide and 6" along the pipe through the joint. The test will include bending the strips 180° over and checking for disbondment.

Prior to any testing by the Department, the applicant must tap the fusion service tee in the proper manner in order to be qualified to fuse and tap service tees.

28.08 Mechanical Qualification Requirements (Department Only)

Applicants qualifying to connect plastic pipe using mechanical type fittings shall assemble one connection of each type being qualified for in the presence of a testor. Assembly must follow the procedure for the fitting as shown in Section 16.07 "Joining Pipe & Fittings."

Testor shall monitor the assembly for procedural correctness and examine the finished assembly for comparison to a proper assembled fitting. Destructive or pressure testing is not required.

28.09 Requalification Requirements

Requalification shall be accomplished by making at least one joint on the job site each year for each joint type. If no jobs are in progress, then at least one joint shall be made in the shop and tested before the due date of the fusor's annual requalification.

A person must be requalified if, during any 12-month period, that person:

A. Does not make any joints under that procedure, i.e., socket, saddle, butt type - or:

B. Has 3 joints or 3% of joints made, whichever is greater, under that procedure, that are found unacceptable by pressure testing or visual inspection.